VAV terminal units

TVE

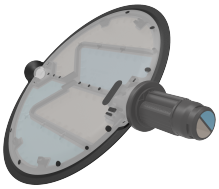

Differential pressure measurement via damper blade

Compact controller with display

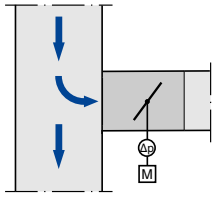

For all upstream conditions

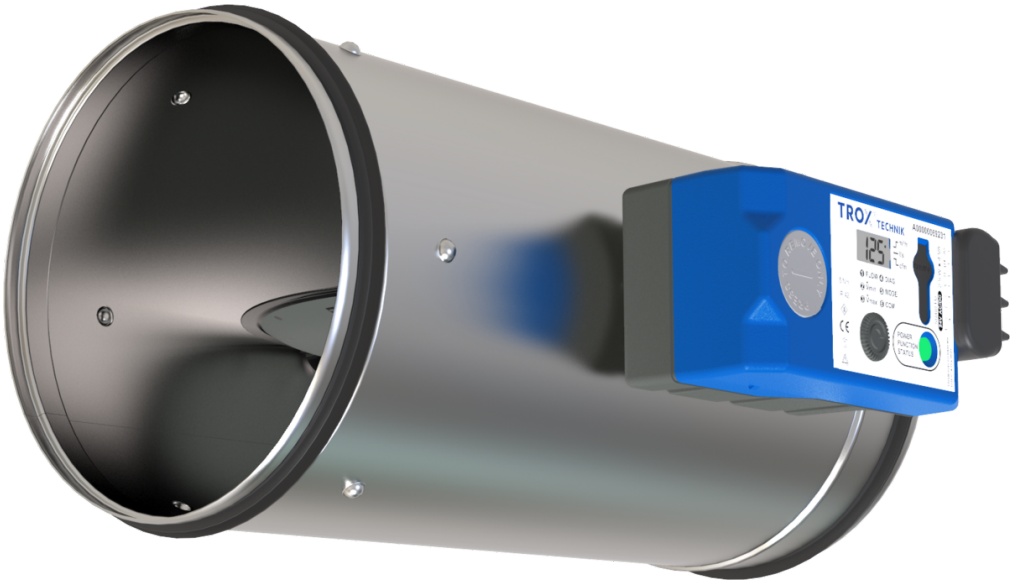

Compact solution for low airflow velocities

Circular air terminal units for variable air volume systems with low airflow velocities, suitable even with unfavourable upstream conditions

- Effective pressure measurement not with a tube, but by means of the damper blade
- Effective pressure transmission through effective pressure channel in the shaft
- Terminals with protective cover, no junction box required
- Any airflow direction if dynamic transducer is used
- Suitable for airflow velocities of 0.5 – 13 m/s
- Compact dimensions allow for use in restricted spaces
- Plug-and-play solution in conjunction with X-AIRCONTROL room control
- Exact measurement even with low airflow velocities
- Any installation orientation even with static transducer
- Closed blade air leakage to EN 1751, at least class 3
- Casing air leakage to EN 1751, class C
- Volume flow rate range 1:25

Optional equipment and accessories

- Acoustic cladding for the reduction of case-radiated noise
- Secondary silencer CA (for Germany and Switzerland), CAH (for EMEA) or CF for the reduction of air-regenerated noise
- Hot water heat exchanger WL and electric air heater EL for reheating the airflow

Conforms to VDI 6022

General information	2	Order code	9
Function	4	Variants	11
Technical data	5	Dimensions and weight	15
Quick sizing	5	Product details	19
Specification text	8	Nomenclature	22

General information

Application
- Circular VAV terminal units for use in ventilation and air conditioning systems
- For almost all tasks when controlling, restricting, or shutting off supply and extract air flows
- Also for unfavourable upstream conditions at low air velocities
- Closed-loop volume flow control using an external power supply
- For variable or constant volume flow systems
- Shut-off by override control (by others)

Special characteristics
- High differential pressure signal with small angle of attack
- Factory set-up or programming and aerodynamic function testing
- Volume flow rate can be measured and subsequently adjusted, additional adjustment tool may be required (depending on the variant of the control component)
- Tubeless differential pressure measurement via damper blade
- Differential pressure transmission through differential pressure duct in shaft
- Any airflow direction if dynamic transducer is used
- Any installation orientation also with static transducer
- Suitable for airflow velocities of 0.5 – 13 m/s
- Compact dimensions for use in confined ceiling areas

Nominal sizes
- 100, 125, 160, 200, 250, 315, 400

Variants
- TVE: VAV terminal unit
- TVE-D: VAV terminal unit with acoustic cladding
- TVE-FL: VAV terminal unit with flanges on both ends
- TVE-D-FL: VAV terminal unit with acoustic cladding and flanges on both ends
- Units with acoustic cladding and/or a circular silencer CA (for Germany and Switzerland), CAH (for EMEA) or CF for demanding acoustic requirements

Construction
- Galvanised sheet steel
- P1: Surface powder-coated, silver grey (RAL 7001)
- A2: Stainless steel

Parts and characteristics
- Ready-to-commission unit which consists of mechanical parts and control components.
- Damper blade with integrated measuring unit
- Shaft with differential pressure duct for measured value transmission
- Factory assembled control components complete with wiring
- Each unit is tested on a special aerodynamic test rig at the factory
- Documentation of the test rig data with a test label or a volume flow scale on the unit
- High control accuracy even in case of unfavourable upstream conditions

Attachments
- EASY controller: compact unit consisting of controller with potentiometers, differential pressure transducer and actuator
- Compact controller: compact unit consisting of controller, differential pressure transducer and actuator
- Compact controller Modbus: variant with Modbus RTU interface and disply; Plug-and-play solution in conjunction with X-AIRCONTROL room control
- Compact controller BACnet: variant with BACnet-MS/TP and display; can also be converted to Modbus RTU by the customer

Accessories
- G2: Matching flanges for both ends
- D2: Double lip seals on both ends (factory fitted)

Useful additions
- Circular silencer CA (for Germany and Switzerland), CAH (for EMEA) or CF
- Heat exchanger Type WL
- Electric air heater Type EL

Construction features
- Circular casing
- Spigot suitable for circular ducts to EN 1506 or EN 13180
- Spigots with groove for seal
- Position of the damper blade can be seen from outside via position indicator
- TVE-FL: Flanges to EN 12220
- Simple exchange of the control components possible

Material and surfaces
Galvanised sheet steel construction
- Casing made of galvanised sheet steel
- Damper blade, effective pressure sensor and shaft made of plastic, PA6, UL94, flame retardant (V-0)
- Damper blade seal made of plastic, TPU, antimicrobial
- Plastic plain bearings

Powder-coated (P1)
- Casing made of galvanised sheet steel, surface powder coated, silver grey (RAL 7001)
- Damper blade, effective pressure sensor and shaft made of plastic, PA6, UL94, flame retardant (V-0)
- Damper blade seal made of plastic, TPU, antimicrobial
- Plastic plain bearings

Stainless steel construction (A2)
- Casing made of stainless steel 1.4301
- Damper blade, effective pressure sensor and shaft made of plastic, PA6, UL94, flame retardant (V-0)
- Damper blade seal made of plastic, TPU, antimicrobial
- Plastic plain bearings

Acoustic cladding
- Variant with acoustic cladding (-D)
- Acoustic cladding made of galvanised sheet steel
- PE ring for the insulation of structure-borne noise

- Lining made of mineral wool

Mineral wool
- According to EN 13501, fire rating class A1, non-combustible
- RAL quality mark RAL-GZ 388
- Non-hazardous thanks to high biosolubility according to the German Ordinance on Hazardous Substances and Note Q of the European Regulation (EC) No. 1272/2008

Standards and guidelines

Meets the hygiene requirements of
- EN 16798, Part 3
- VDI 6022, Sheet 1
- DIN 1946, Part 4
- For further standards and guidelines, please refer to the hygiene certificate

Casing air leakage
- EN 1751, Class C

Closed damper blade air leakage:

NS 100 – 160
- EN 1751, Class 3
- Meets the general requirements of DIN 1946, part 4, with regard to the acceptable closed damper blade air leakage

NS 200 – 400
- EN 1751, Class 4
- Meets the increased requirements of DIN 1946, part 4, with regard to the acceptable closed blade air leakage

Maintenance

- Maintenance-free, as construction and materials are not subject to wear and tear

Function

Functional description

The control damper blade works as an actuator and as an effective pressure sensor. Through the effective pressure channel in the shaft of the detected effective pressure reaches the transducer (static or dynamic), is converted into an electrical signal and compared with the setpoint value.

In the case of a control deviation, the integrated actuator changes the position of the control damper blade. As a result, the volume flow rate is maintained at a constant level in close tolerances over the entire differential pressure range.

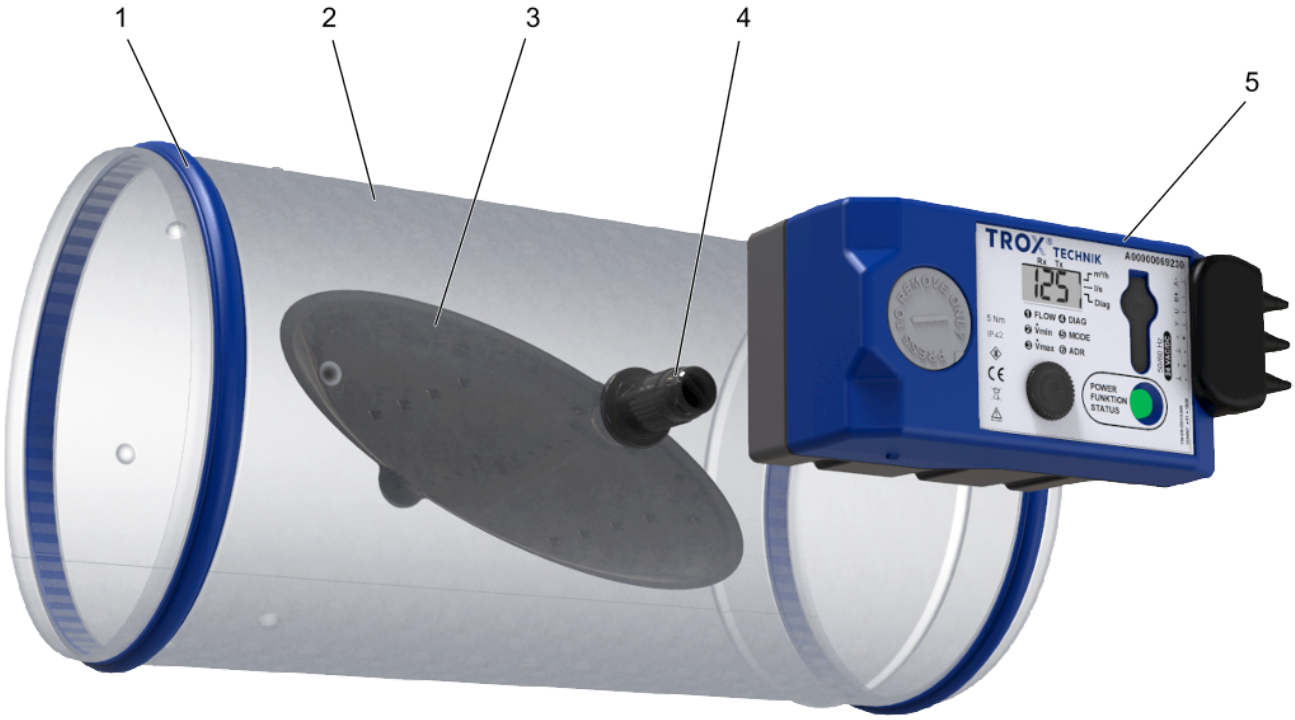

1 Double lip seal
2 Casing
3 Damper blade including differential pressure sensor
4 Shaft with differential pressure channel
5 Electronic volume flow controller

Technical data

Nominal sizes	100 – 400 mm
Volume flow rate range	4 - 1388 l/s or 14 - 5000 m³/h
Volume flow rate control range (unit with dynamic effective pressure measurement)	Approx. 4 – 100 % of the nominal volume flow rate
Minimum differential pressure	Up to 75 Pa (without circular silencer)
Maximum differential pressure	Control component with dynamic transducer: 900 Pa, control component with static transducer: 600 Pa
Operating temperature	10 to 50 °C

Quick sizing

Quick sizing tables provide a good overview of the minimum differential pressures, the volume flow rate accuracy and the room sound pressure levels that can be expected. Intermediate values may be achieved by interpolation. The sound power levels for calculating the sound pressure levels were measured in the TROX laboratory according to DIN EN ISO 5135 - see "Basic information and nomenclature". Precise results and spectral data for all control components can be calculated with our Easy Product Finder design program. The first selection criteria for the nominal size are the actual volume flow rates q_{vmin} and q_{vmax}.

Volume flow rate ranges and minimum differential pressure values

The minimum differential pressure of VAV terminal units is an important factor in designing the ductwork and in rating the fan including speed control. Sufficient static differential pressure (Δpstat,min) must be ensured for all operating conditions and for all controllers. The measurement points for fan speed control must be selected accordingly. The volume flow rates given for VAV terminal units depend on the nominal size and on the control component (attachment) that is installed.

Volume flow ranges and minimum differential pressure

Controller for dynamic and static measurement principle

Attachment: Easy, XB0, XM0, XM0-J6, XS0, XS0-J6, XDMB0, XSMB0

Nominal size	qv [l/s]	qv [m³/h]	Δp_{stmin} [Pa]				Δqv [±%]
		qv [m³/h]	1	2	3	4	
100	4	14	13	14	14	14	18
100	35	127	36	39	41	43	7
100	67	241	48	56	64	71	5
100	98	354	72	89	105	121	5
125	6	21	13	14	14	14	19
125	58	207	37	39	41	43	7
125	109	393	49	56	62	68	5
125	160	579	75	89	102	115	5
160	10	35	18	19	19	19	18
160	93	333	42	44	45	46	7
160	175	631	53	58	62	66	5
160	258	929	68	77	86	95	5
200	16	55	18	19	19	19	18
200	150	541	42	43	44	45	7
200	285	1027	54	58	61	65	5
200	420	1513	70	78	85	92	5
250	25	87	16	17	17	17	18
250	228	822	38	39	40	41	7
250	433	1558	48	51	53	56	5
250	636	2293	61	67	72	77	5

Nominal size	qv [l/s]	qv [m³/h]	Δp_{stmin} [Pa]				Δqv [±%]
		qv [m³/h]	1	2	3	4	
315	52	186	18	19	19	19	16
315	359	1291	37	38	38	39	7
315	665	2395	46	48	50	51	6
315	972	3500	54	58	61	65	5
400	117	420	20	21	21	21	14
400	541	1947	35	36	36	36	7
400	965	3473	44	45	46	47	6
400	1388	5000	50	52	54	56	5

1 Basic device
2 Basic device with circular silencer CF, insulation thickness 50 mm, length 500 mm
3 Basic device with circular silencer CF, insulation thickness 50 mm, length 1000 mm
4 Basic device with circular silencer CF, insulation thickness 50 mm, length 1500 mm

Quick sizing table for sound pressure levels

The quick sizing tables are based on generally accepted attenuation levels. If the sound pressure level exceeds the required level, a larger air terminal unit and/or a silencer or acoustic cladding is required. For more information on the acoustic data, see basic information and nomenclature.

Quick sizing table for air-regenerated noise L_{PA}

Controller including silencer

Nominal size	q_v [l/s]	q_v [m³/h]	Δp_{st} = 150 Pa				Δp_{st} = 500 Pa			
			1	2	3	4	1	2	3	4
100	4	14	32	< 15	< 15	< 15	42	17	< 15	< 15
100	35	127	46	32	28	24	56	40	34	31
100	67	241	51	37	33	29	60	47	42	38
100	98	354	55	37	32	30	64	52	47	44
125	6	21	37	15	< 15	< 15	48	26	16	< 15
125	58	207	48	34	28	25	59	42	35	31
125	109	393	52	39	34	31	62	47	41	37
125	160	579	56	41	37	34	63	49	44	40
160	10	35	42	24	15	< 15	54	38	29	22
160	93	333	45	33	28	25	58	43	36	31
160	175	631	50	38	34	31	58	44	38	34
160	258	929	53	40	35	33	57	44	39	36
200	16	55	33	20	< 15	< 15	44	32	26	21
200	150	541	46	36	31	28	57	47	42	39
200	285	1027	49	38	34	32	58	49	44	41
200	420	1513	53	43	40	38	58	49	45	42
250	25	87	40	29	22	17	52	42	36	31
250	228	822	46	37	32	29	58	50	45	41
250	433	1558	47	39	34	32	57	50	45	41
250	636	2293	52	45	41	38	57	50	45	42
315	52	186	42	34	28	24	54	47	42	38
315	359	1291	43	36	31	28	55	48	44	41
315	665	2395	45	38	33	31	54	48	44	41
315	972	3500	48	41	37	34	54	47	44	41
400	117	420	47	42	37	32	57	53	48	43
400	541	1947	45	40	35	31	55	50	46	43
400	541	1947	44	38	34	31	54	49	46	42

Nominal size	q_v [l/s]	q_v [m³/h]	Δp_{st} = 150 Pa				Δp_{st} = 500 Pa			
			1	2	3	4	1	2	3	4
400	1388	5000	48	42	38	35	54	49	45	42

Air-regenerated noise L_{PA} [dB(A)] at static differential pressure Δ_{pst} from 150 or 500 Pa
1 Basic unit
2 Basic unit with circular silencer CF, insulation thickness 50 mm, length 500 mm
3 Basic unit with circular silencer CF, insulation thickness 50 mm, length 1000 mm
4 Basic unit with circular silencer CF, insulation thickness 50 mm, length 1500 mm

Quick sizing table for case-radiated noise L_{PA}

Controller including acoustic cladding

nominal size	q_v [l/s]	q_v [m³/h]	Δp_{st} = 150 Pa		Δp_{st} = 500 Pa	
			1	2	1	2
100	4	14	15	< 15	25	< 15
100	35	127	29	18	39	28
100	67	241	34	23	43	32
100	98	354	37	26	48	37
125	6	21	20	< 15	31	20
125	58	207	31	20	42	31
125	109	393	35	24	45	34
125	160	579	40	29	47	36
160	10	35	22	15	34	27
160	93	333	25	18	38	31
160	175	631	31	24	39	32
160	258	929	36	29	40	33
200	16	55	< 15	< 15	24	< 15
200	150	541	26	< 15	37	22
200	285	1027	32	17	41	26
200	420	1513	38	23	43	28
250	25	87	24	< 15	36	21
250	228	822	32	17	44	29
250	433	1558	36	21	46	31
250	636	2293	43	28	48	33
315	52	186	27	< 15	38	21
315	359	1291	32	15	44	27
315	665	2395	37	19	46	28
315	972	3500	41	24	47	30
400	117	420	32	16	42	26
400	541	1947	36	20	46	30
400	965	3473	37	21	48	32
400	1388	5000	43	27	49	33

Case-radiated noise L_{PA} [dB(A)] at static differential pressure Δ_{pst} from 150 or 500 Pa
1 Basic unit
2 Basic unit with acoustic cladding
Note:
Information on case-radiated noise for combinations of basic unit and optional acoustic cladding and secondary silencer can be found in the Easy Product Finder design program.

Specification text

This specification text describes just one variant of the product and applies to many applications. Texts for variants can be generated with our Easy Product Finder design programme.

Specification text

Circular VAV terminal units for variable and constant air volume systems, suitable for supply or extract air, available in 7 nominal sizes. High control accuracy of set volume flow rates, even in unfavourable upstream conditions. Control range at least 1:25. Differential pressure measurement and control via damper blade. Tubeless differential pressure transmission through differential pressure duct in shaft Closed blade air leakage to EN 1751: at least class 3, from NS 200: class 4. Casing air leakage to EN 1751, class C. Ready-to-commission unit which consists of the mechanical parts and the factory mounted electronic control component. Position of the damper blade indicated externally at the control component. The damper blade is factory set to open position, which allows a ventilation airflow even without control. Meets the hygiene requirements of EN 16798, Part 3, of VDI 6022, Sheet 1, and of DIN 1946, Part 4.

Special features

- High differential pressure signal with small angle of attack
- Factory set-up or programming and aerodynamic function testing
- Volume flow rate can be measured and subsequently adjusted, additional adjustment tool may be required (depending on the variant of the control component)
- Tubeless differential pressure measurement via damper blade
- Differential pressure transmission through differential pressure duct in shaft
- Any airflow direction if dynamic transducer is used
- Any installation orientation also with static transducer
- Suitable for airflow velocities of 0.5 – 13 m/s
- Compact dimensions for use in confined ceiling areas

Materials and surfaces

- Casing made of galvanised sheet steel
- Damper blade and shaft made of plastic, PA6, UL94-V0
- Damper blade seal made of plastic, TPU, antimicrobial
- Plastic plain bearings

Equivalence criteria

- Declaration of hygiene conformity in accordance with VDI 6022, part 1 (01/2018), ÖNORM H 6020 (03/2015) and ÖNORM H 6021 (08/2016)
- Meets the hygiene requirements according to EN 16798 Part 3, VDI 6022 Sheet 1, DIN 1946 Part 4
- Acoustic data determined according to ÖNORM EN ISO 5135
- Independent of airflow direction - airflow in both directions
- Suitable for airflow velocities of 0.5 – 13 m/s
- No upstream section required (even behind T-piece)
- Maximum control deviation of 5 % at q_{vmax}, without upstream section
- Setting the volume flow without adjustment device via V_{min}- and V_{max}-Potentiometer
- Electrical connections with screw terminals, no additional terminal box required
- The test report of the factory parameterisation, functional test and adjustment under air by reference measurement on a regularly validated test rig in accordance with DIN EN ISO 9001 is made available

Connection type

- Spigot with groove for lip seal, suitable for connecting ducts according to EN 1506 or EN 13180

Technical data

- Minimum differential pressure: up to 75 Pa (without circular silencer)

Maximum differential pressure

- Control component with dynamic transducer: 900 Pa
- Control component with static transducer: 600 Pa

Specification text attachment

Variable volume flow control with electronic Easy controller for applying a reference value and capturing an actual value to be integrated with the MCE/BACS.

- Supply voltage 24 V AC/DC
- Signal voltages 0 – 10 V DC
- Possible override control with external switches using potential-free contacts: CLOSE, OPEN, q_{vmin} and q_{vmax}
- Potentiometers with percentage scales to set the volume flow q_{vmin} andq_{vmax}
- The actual value signal relates to the nominal volume flow so that commissioning and subsequent adjustment are simplified
- Volume flow rate control range: approx. 4 – 100 % of the nominal volume flow
- Visible indicator light for signalling the various operating conditions
- Electrical connections with screw terminals. Double screw terminals for looping the supply voltage, i.e. for simple connection of voltage transmission to the next controller.

Life cycle assessment

A life cycle assessment is available for the product type in the form of an environmental product declaration (EPD), which has been checked and published by a programme holder.

Order code

Order code for volume flow control (with Easy controller)

TVE – D / 100 / D2 / Easy
1 2 5 6 7

1 Type
TVE VAV terminal unit

2 Acoustic cladding
No entry: without acoustic cladding
D with acoustic cladding

5 Nominal size [mm]
100, 125, 160, 200, 250, 315, 400

6 Accessories
No entry: without accessories
D2 Double lip seal, both ends

7 Attachment (control component)
Easy Volume flow controller, dynamic, analogue interface, setting of $q_{v_{min}}$ and $q_{v_{max}}$ with potentiometers (provided by the client)

Order example: TVE-D/200/D2/Easy

Type	TVE
Acoustic cladding	With acoustic cladding
Nominal size [mm]	200
Accessories	Double lip seal both ends
Attachments (control components)	Volume flow controller, dynamic, analogue interface, setting of q_{min} and $q_{v_{max}}$ with potentiometers (by others)

Order code for volume flow control (with VARYCONTROL attachment)

TVE – D – P1 – FL / 100 / G2 / XB0 / V 0 / 200 – 900 [m³/h]
1 2 3 4 5 6 7 8 9 10

1 Type
TVE VAV air terminal unit

2 Acoustic cladding
No entry: without acoustic cladding
D with acoustic cladding

3 Material
No entry: galvanised sheet steel
P1 Surface powder-coated, RAL 7001 (silver grey)
A2 Stainless steel construction

4 Air duct connection
No entry: push-fit end, suitable for air ducts according to EN 1506; with groove for optional seal
FL Flanges on both ends

5 Nominal size [mm]
100, 125, 160, 200, 250, 315, 400

6 Accessories
No entry: without accessories
D2 Double lip seal both ends (with groove: only for push-fit end)
G2 Matching flange for every flange (only with FL)

7 Attachment (control component)
XB0 Dynamic volume flow controller, analogue interface
XM0 Dynamic volume flow controller with display, interface Modbus RTU or analogue
XM0-J6 Dynamic volume flow controller with display, Modbus RTU interface, RJ12 socket (for X-AIRCONTROL)
XS0 Static volume flow controller with display, Modbus RTU or analogue interface
XS0-J6 Static volume flow controller with display, Modbus RTU interface, RJ12 socket (for X-AIRCONTROL)
XDMB0 Dynamic volume flow controller with display, Modbus RTU or BACnet MS/TP or analogue interface
XSMB0 Static volume flow controller with display, Modbus RTU or BACnet MS/TP or analogue interface

8 Operating mode
For attachments XB0, XM0, XS0
F Constant value mode, one setpoint value (no external switch contact)
V Variable operation (default setpoint value from analogue signal)

For attachments XM0, XM0-J6, XS0, XS0-J6
M Modbus RTU interface, variable operation (default setpoint value in Modbus register)

For attachments XDMB0, XSMB0
B BACnet MS/TP interface, variable operation (setpoint specification via BACnetObject)

9 Signal voltage range
Only with operating mode F or V
0 0 – 10 V DC
2 2 – 10 V DC

10 Operating values for factory setting
Volume flow rate [m³/h or l/s]
$q_{v_{const}}$ (with operating mode F)
$q_{v_{min}}$ – $q_{v_{max}}$ (for operating mode V, M, B)

Order example: TVE-D-P1-FL/100/G2/XB0/V0/200-900 [m³/h]

Type	TVE
Acoustic cladding	with acoustic cladding
Material	Air duct powder-coated RAL 7001, silver grey
Air duct connection	Flanges on both ends
Nominal size [mm]	100
Accessories	Matching flange for every flange (only with FL)
Attachments (control component)	Volume flow controller, dynamic, analogue interface
Operating mode	variable operation
Signal voltage range	0 – 10 V DC
Operating values for factory setting	200 – 900 [m³/h]

Order example: TVE/200/D2/XB0/V0/500-1200 [m³/h]

Type	TVE
Acoustic cladding	without acoustic cladding
Material	galvanised sheet steel
Air duct connection	Push-fit, suitable for ducts according to EN 1506; with groove for optional lip seal
Nominal size [mm]	200
Accessories	Double lip seal both ends
Attachments (control component)	Volume flow controller, dynamic, analogue interface
Operating mode	variable operation
Signal voltage range	0 – 10 V DC
Operating values for factory setting	500 – 1200 [m³/h]

Variants

VAV terminal unit, variant TVE

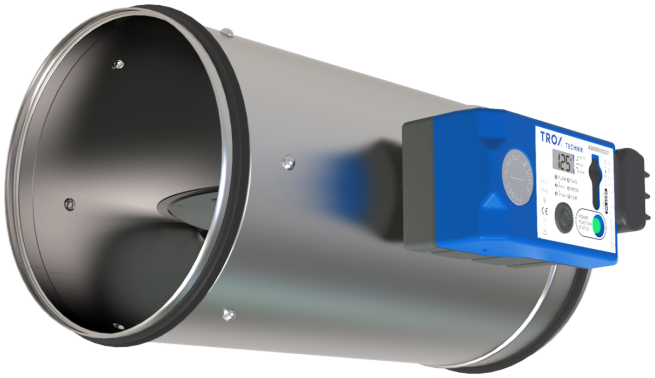

Application

- Spigot

VAV terminal unit, variant TVE-D

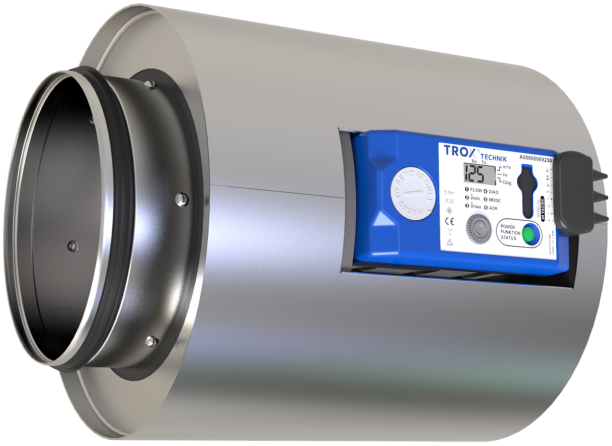

Application

- With acoustic cladding
- For rooms where the case-radiated noise of the unit is not sufficiently reduced by a false ceiling
- The circular ducts for the room under consideration must have adequate acoustic insulation (provided by others) on the fan and room ends
- Acoustic cladding cannot be retrofitted

VAV terminal unit, variant TVE-FL

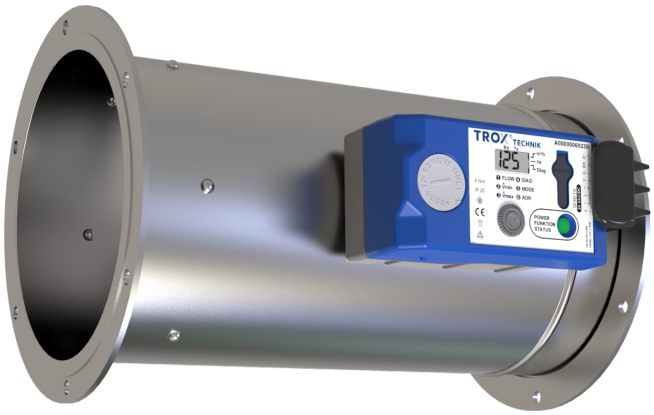

Application

- With flanges on both ends to make detachable connections to the ducting
- Optional available with matching flanges

VAV terminal unit, variant TVE-D-FL

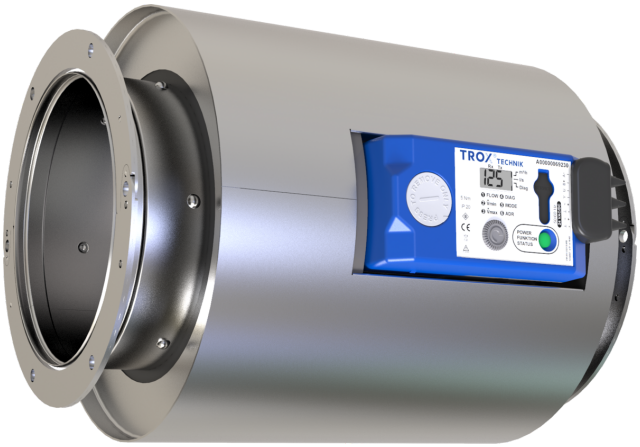

Application

- With flanges on both ends to make detachable connections to the ducting
- With acoustic cladding
- Optional available with matching flanges
- For rooms where the case-radiated noise of the unit is not sufficiently reduced by a false ceiling
- The circular ducts for the room under consideration must have adequate acoustic insulation (provided by others) on the fan and room ends
- Acoustic cladding cannot be retrofitted

Material

</p>

Standard construction

Order code detail	Part	Material
–	Casing	Galvanised steel
	Damper blade	Plastic, PA6, UL 94, flame retardant
	Damper blade seal	Plastic, TPU, micro bacterial resistant
	Plain bearings	Plastic
	Shaft	Plastic, PA6, UL 94, flame retardant
	Effective pressure sensor	

Powder-coated construction

Order code detail	Part	Material
P1	Casing	Galvanised sheet steel - powder coated, RAL 7001, silver grey
	Damper blade	Plastic, PA6, UL 94, flame retardant
	Damper blade seal	Plastic, TPU, micro bacterial resistant
	Plain bearings	Plastic
	Shaft	Plastic, PA6, UL 94, flame retardant
	Effective pressure sensor	

Stainless steel construction

Order code detail	Part	Material
A2	Casing	Stainless steel, material no. 1.4301
	Damper blade	Plastic, PA6, UL 94, flame retardant
	Damper blade seal	Plastic, TPU, micro bacterial resistant
	Plain bearings	Plastic
	Shaft	Plastic, PA6, UL 94, flame retardant
	Effective pressure sensor	

Option acoustic cladding

Order code detail	Part	Material
D	Acoustic cladding	Galvanised sheet steel

Order code detail	Part	Material
	Insulation of structure-borne noise	Polyethylene, PE
	Lining	Mineral wool to EN 13501, fire rating class A1, non-combustible

Dimensions and weight

VAV terminal unit without acoustic cladding (TVE)

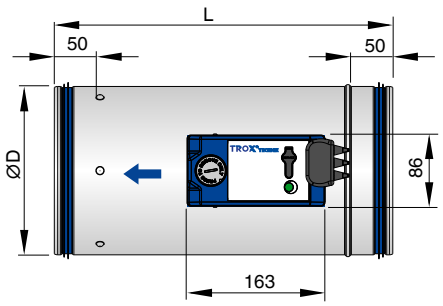

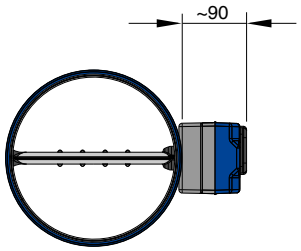

Note:
Length L depends on the nominal size.
Lip seals can be selected as an option; note that the illustration does not show the actual product.

Note:
The illustration shows control component type Easy, Compact.
For individual dimensions, see section on space requirements for commissioning and maintenance.

Connection type

- Spigot with groove for lip seal, suitable for connecting ducts according to EN 1506 or EN 13180

Dimensions/weight for TVE

NS	L	ØD	kg
100	310	99	1,3
125	310	124	1,5
160	310	159	1,8
200	400	199	2,5
250	400	249	3
315	400	314	3,8
400	485	399	4,9

VAV terminal unit with acoustic cladding (TVE-D)

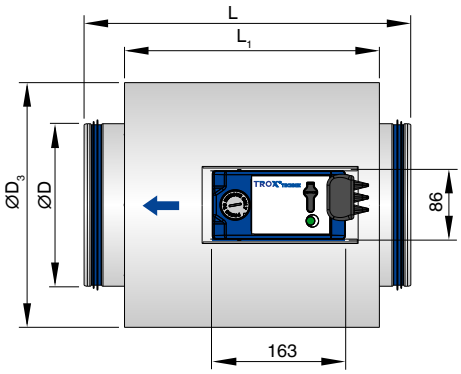

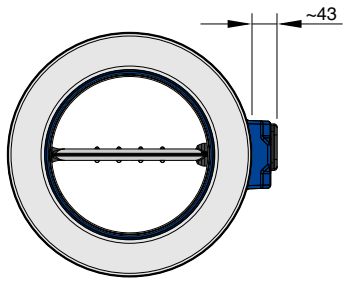

Note:
Length L, L1 depends on the nominal size.
Lip seals can be selected as an option; note that the illustration does not show the actual product.

Note:
The illustration shows control component type Easy, Compact. For individual dimensions, see section on space requirements for commissioning and maintenance.

Connection type

- Spigot with groove for lip seal, suitable for ducts according to EN 1506 or EN 13180

Dimensions/weight TVE-D

NS	L	L₁	ØD	ØD₃	kg
100	310	233	99	199	2,6
125	310	233	124	219	3
160	310	233	159	261	3,6
200	400	312	199	299	5
250	400	312	249	354	6,1
315	400	312	314	416	7,5
400	485	417	399	498	10,6

Terminal unit with flange (TVE-FL)

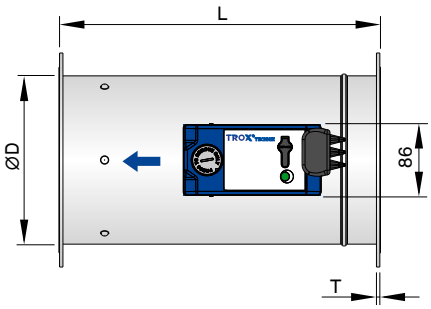

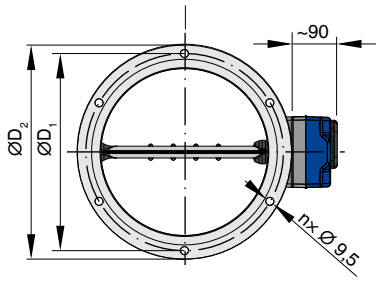

Note:
Length L depending on nominal size.

Note:
The illustration shows control component type Easy, Compact. For individual dimensions, see section on space requirements for commissioning and maintenance.

Dimensions/weight TVE-FL

NS	L	ØD	ØD₁	ØD₂	n	T	kg
100	298	99	132	152	4	5	1,9
125	298	124	157	177	4	5	2,2
160	298	159	192	212	6	5	2,7
200	388	199	233	253	6	5	3,6
250	388	249	283	303	6	5	4,4
315	388	314	352	378	8	5	5,8
400	474	399	438	464	8	5	7,5

Note: Tolerances for dimensions L: ± 5 mm

Terminal unit with acoustic cladding and flange (TVE-D-FL)

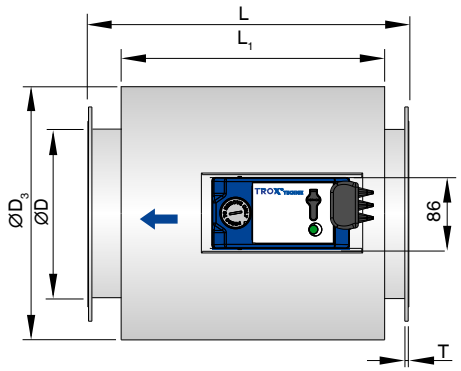

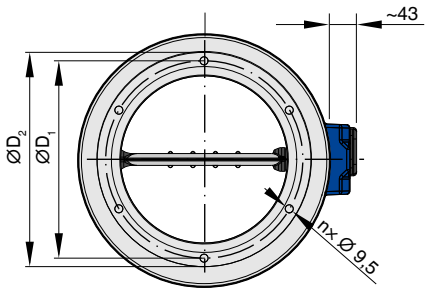

Note:
Length L, L1 depending on nominal size.

Note:
The illustration shows control component type Easy, Compact. For individual dimensions, see section on space requirements for commissioning and maintenance.

Dimensions/weight for TVE-D-FL

NS	L	L₁	ØD	ØD₁	ØD₂	ØD₃	n	T	kg
100	298	233	99	132	152	199	4	5	3,2
125	298	233	124	157	177	219	4	5	3,7
160	298	233	159	192	212	261	6	5	4,5
200	388	312	199	233	253	299	6	5	6,1
250	388	312	249	283	303	354	6	5	7,5
315	388	312	314	352	378	416	8	5	9,5
400	474	417	399	438	464	498	8	5	13,2

Note: Tolerance for dimension L: ± 5 mm

Access to attachments, mounted on one side

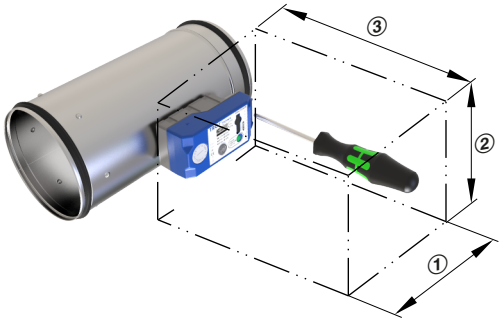

Space requirement, control component on one side

Attachment	(1)	(2)	(3)
Easy controller: Easy	250	200	300
Compact controller: XB0, XM0, XM0-J6, XS0, XS0-J6, XDMB0, XSMB0	250	200	300

Space required for commissioning and maintenance

Keep sufficient space free in the area of the attachments for commissioning and maintenance. It may be necessary to provide sufficiently sized inspection access openings.

Product details

Installation and commissioning

- Any installation orientation
- TVE-D: For constructions with acoustic cladding, ducts on the room side should have cladding up to the acoustic cladding of the controller

Upstream conditions

The differential pressure which is decisive for the volume flow, is recorded and averaged on the damper blade. Therefore, the volume flow rate accuracy Δq_v is independent from the upstream section but in case of junctions from the main line, dependent on the installation variant of the terminal unit in the branch duct.

Note on inflow via an open duct (exhaust air mode)

The inflow at the open end of a duct causes strong turbulence and also has an influence on the volume flow rate accuracy.
In this case, an upstream section or an inflow aid is required.
For further information on this specific installation situation, see the installation and operating manual.

Bend

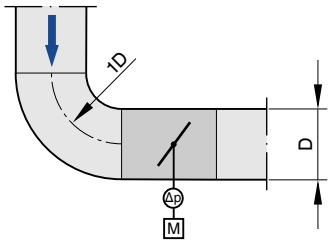

In front of the unit, a bend with a curvature radius of ≥ 1D has only a negligible effect on the volume flow rate accuracy Δq_v.

Junction

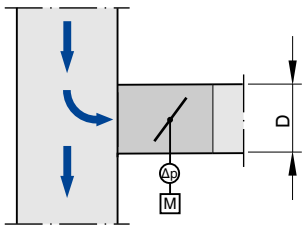

A junction from main ducts causes strong turbulence. The specified volume flow rate accuracy Δq_v can be achieved for installation variants 1 and 2 without an upstream section. With installation variants 3 and 4, the specified volume flow rate accuracy Δq_v can also be achieved without an upstream section if the installation position of the control unit is adapted to the air direction in the main duct.

Installation variant 1, horizontal damper blade position

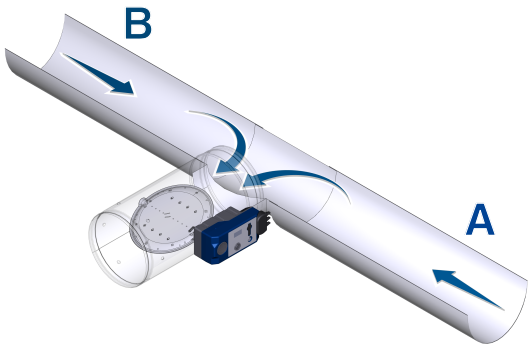

Airflow direction A or B have no significant influence on Δq_v.

Installation variant 2, horizontal damper blade position

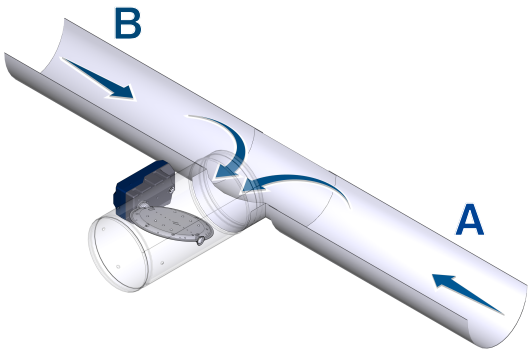

Airflow direction A or B have no significant influence on Δq_v.

Installation variant 3, vertical damper blade position

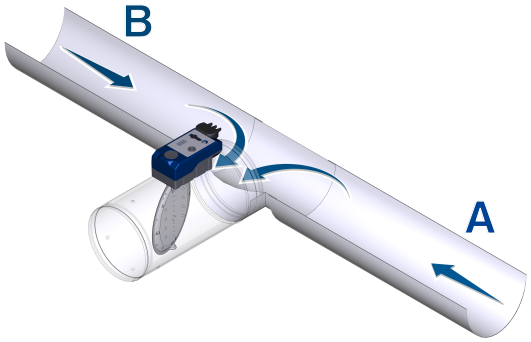

For airflow direction A in the main duct: The specified volume flow rate accuracy Δq_v is achieved.
For airflow direction B in the main duct: For the specified volume flow accuracy Δq_v, a surcharge of 10 % in the upper third of the nominal volume flow range must be taken into account.

Installation variant 4, vertical damper blade position

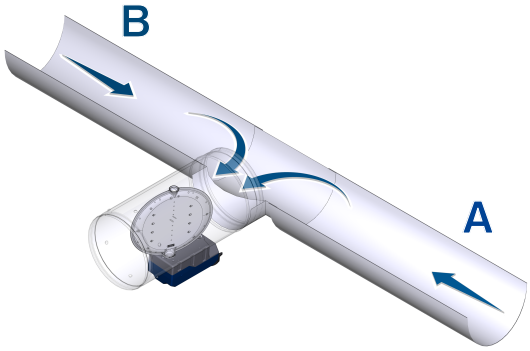

For airflow direction A in the main duct: For the specified volume flow accuracy Δq_v, a surcharge of 10 % in the upper third of the nominal volume flow range must be taken into account.
For airflow direction B in the main duct: The specified volume flow rate accuracy Δq_v is achieved.

TVE: control components VARYCONTROL

Attachment	Controlled variable	Interface	Effective pressure transducer	Actuator	Manufacturer
Easy controller, dynamic					
Easy	q_v	0 – 10 V	integrated	Slow running integrated	(1)
Compact controller, dynamic					
XB0	q_v	0 – 10 V or 2 – 10 V	integrated	Slow running integrated	(1)
XM0	q_v	0 - 10 V or 2 - 10 V or Modbus RTU	integrated	Slow running integrated	(1)
XM0–J6	q_v	Modbus RTU interface with RJ12 socket (for X-AIRCONTROL)	integrated	Slow running integrated	(1)
XDMB0	q_v	0 - 10 V or 2 - 10 V or Modbus RTU or BACnet MS/TP	integrated	Slow running integrated	(1)
Compact controller, static					
XS0	q_v	0 – 10 V or 2 – 10 V or Modbus RTU	integrated	Slow running integrated	(1)
XS0–J6	q_v	Modbus RTU with RJ12 socket (for X-AIRCONTROL)	integrated	Slow running integrated	(1)
XSMB0	q_v	0 – 10 V or 2 – 10 V or Modbus RTU or BACnet MS/TP	integrated	Slow running, integrated	(1)

q_v Volume flow rate
(1) TROX

Nomenclature

Dimensions of rectangular units

B [mm]; [in]
Duct width

B_1 [mm]; [in]
Screw hole pitch of flange (horizontal)

B_2 [mm]; [in]
Overall dimension of flange (width)

H [mm]; [in]
Duct height

H_1 [mm]; [in]
Screw hole pitch of flange (vertical)

H_2 [mm]; [in]
Overall dimension of flange (height)

Dimensions of circular units

ØD [mm]; [in]
Basic units made of sheet steel: Outer diameter of the spigot; basic units made of plastic: Inside diameter of the spigot

$ØD_1$ [mm]; [in]
Pitch circle diameter of flanges

$ØD_2$ [mm]; [in]
Outer diameter of flanges

L [mm]; [in]
Length of unit including connecting spigot

L_1 [mm]; [in]
Length of casing or acoustic cladding

n [ ]
Number of flange screw holes

T [mm]; [in]
Flange thickness

General information

m [kg]; [lb]
Unit weight including the minimum required attachments (control component)

NS [mm]
Nominal size

f_m [Hz]
Octave band centre frequency

L_{PA} [dB(A)]
Sound pressure level of air-regenerated noise of the VAV terminal unit, A-weighted system attenuation taken into account

L_{PA1} [dB(A)]
Sound pressure level of air-regenerated noise of the VAV terminal unit with secondary silencer, A-weighted system attenuation taken into account

L_{PA2} [dB(A)]
Sound pressure level of case-radiated noise of the VAV terminal unit, A-weighted system attenuation taken into account

L_{PA3} [dB(A)]
Sound pressure level of case-radiated noise of the VAV terminal unit with acoustic cladding, A-weighted system attenuation taken into account

Note on acoustic data: All sound pressure levels are based on a reference value of 20 µPa.

q_{vNom} [m³/h]; [l/s]
Nominal flow rate (100 %): The value depends on product type, nominal size and control component (attachment). Values are published on the internet and in technical leaflets and defined in the Easy Product Finder design programme. Reference value for calculating percentages (e.g. $q_{vmax.}$). Upper limit of the setting range and maximum volume flow rate setpoint value for the VAV terminal unit.

$q_{vmin\ Unit}$ [m³/h]; [l/s]
Technical minimum volume flow: The value depends on product type, nominal size and control component (attachment). Values are defined in the Easy Product Finder design programme Lower limit of the setting range and minimum volume flow rate setpoint value for the VAV terminal unit. Setpoint values below $q_{vmin\ unit,}$ (if q_{vmin} equals zero) may result in unstable control or shut-off.

q_{vmax} [m³/h]; [l/s]
Adjustable by others at upper limit of the operating range for the VAV terminal unit: $q_{vmax.}$ can be set to less than or equal to q_{vnom} on the terminal unit. In case of analogue control of volume flow controllers (typically used), the maximum value of the setpoint signal (10 V) is assigned to the set maximum value ($q_{vmax.}$) (see characteristics).

q_{vmin} [m³/h]; [l/s]
Adjustable by others at lower limit of the operating range for the VAV terminal unit: q_{vmin} should be set to less than or equal to $q_{vmax.}$ q_{vmin} to less than $q_{vmin\ unit,}$ as the control may become unstable or the damper blade may close. q_{vmin} may equal zero. In case of analogue control of volume flow controllers (typically used), the minimum value of the setpoint signal (0 or 2 V) is assigned to the set minimum value (q_{vmin}) (see characteristics).

q_v [m³/h]; [l/s]
Volume flow rate

Δ_{qv} [%]
Volume flow rate accuracy in relation to the setpoint (tolerance)

Δp_{st} [Pa]; [inWg]
Static differential pressure

Δp_{stmin} [Pa]; [inWg]

Static minimum differential pressure: The static minimum differential pressure is equal to the pressure loss of the VAV terminal unit when the damper blade is open, caused by flow resistance (damper blade). If the pressure on the CAV controller is too low, the setpoint volume flow rate may not be achieved, not even when the damper blade is open. Important factor in designing the ductwork and in rating the fan including speed control. Sufficient static differential pressure must be ensured for all operating conditions and for all controllers, and the measurement point or points for speed control must have been selected accordingly to achieve this.

Lengths [mm]; [in]
All lengths are given in millimetres [mm] unless stated otherwise.

Basic unit
Unit for controlling volume flow rates without an attached control component. The main components include the casing with sensor(s) to measure the differential pressure and the damper blade to restrict the volume flow. The basic unit is also referred to as a VAV terminal unit. Important distinguishing features: Geometry or unit shape, material and connection variants, acoustic characteristics (e.g. optional acoustic cladding or integrated silencers), range of volume flow.

Control component
Electronic unit(s) mounted on the basic unit to control the volume flow rate, or the duct pressure, or the room pressure by adjusting the damper blade position. The electronic unit essentially consists of a controller with differential pressure transmitter (integrated or external) and an integrated actuator (Easy and Compact controller).
Important distinguishing features:

- Transmitter: dynamic transmitter for clean air or static transmitter for contaminated air
- Actuator: Standard actuator, slow-running
- Interface technology: analogue interface or digital bus interface for connecting and recording signals and data

Volume flow controller
Consists of a basic unit with an attached control component.