Specification
YSP 227 CM & CMX

3. Mechanical requirements

3.1. Dimension CM

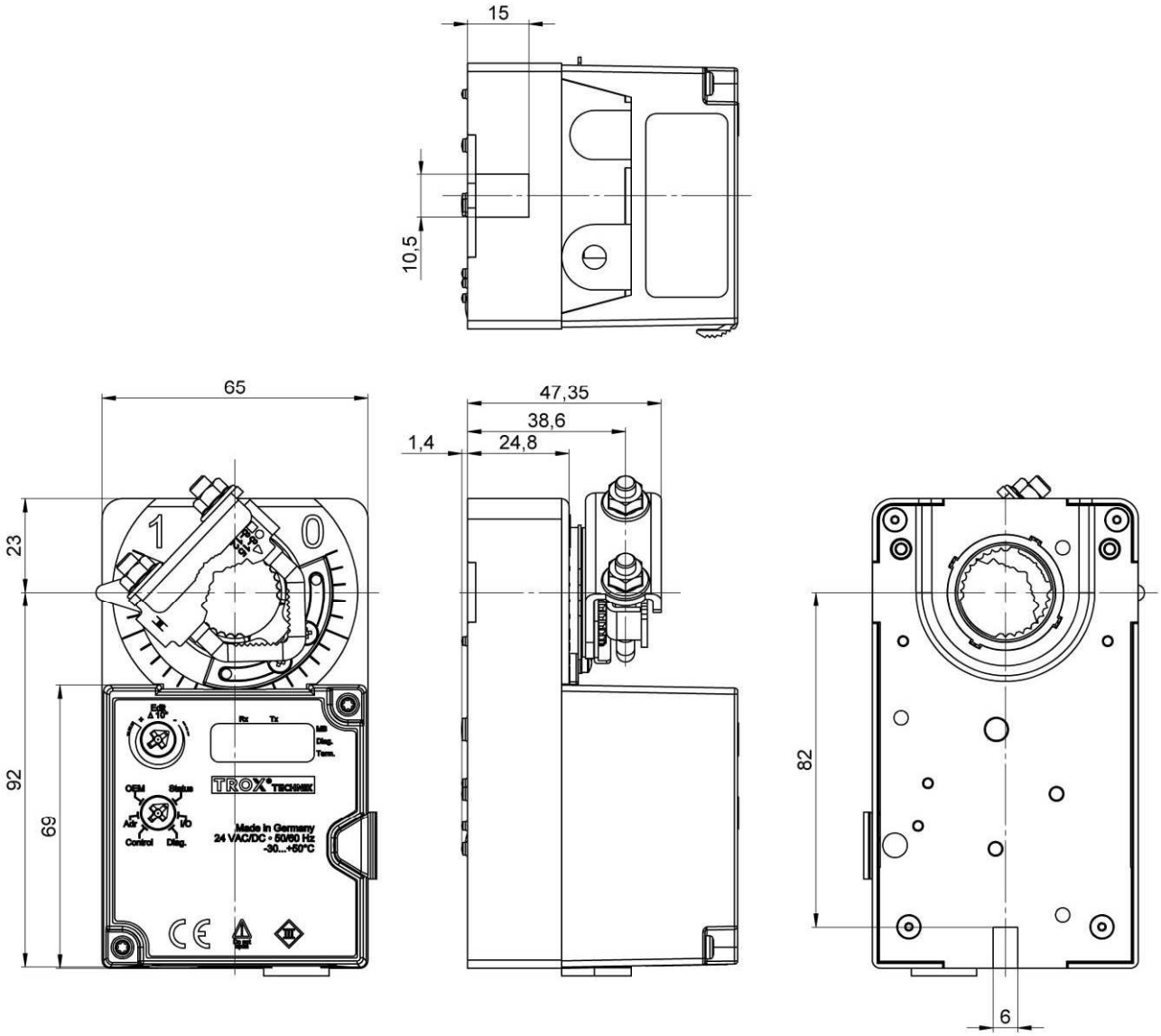

3.2. Dimension CMX

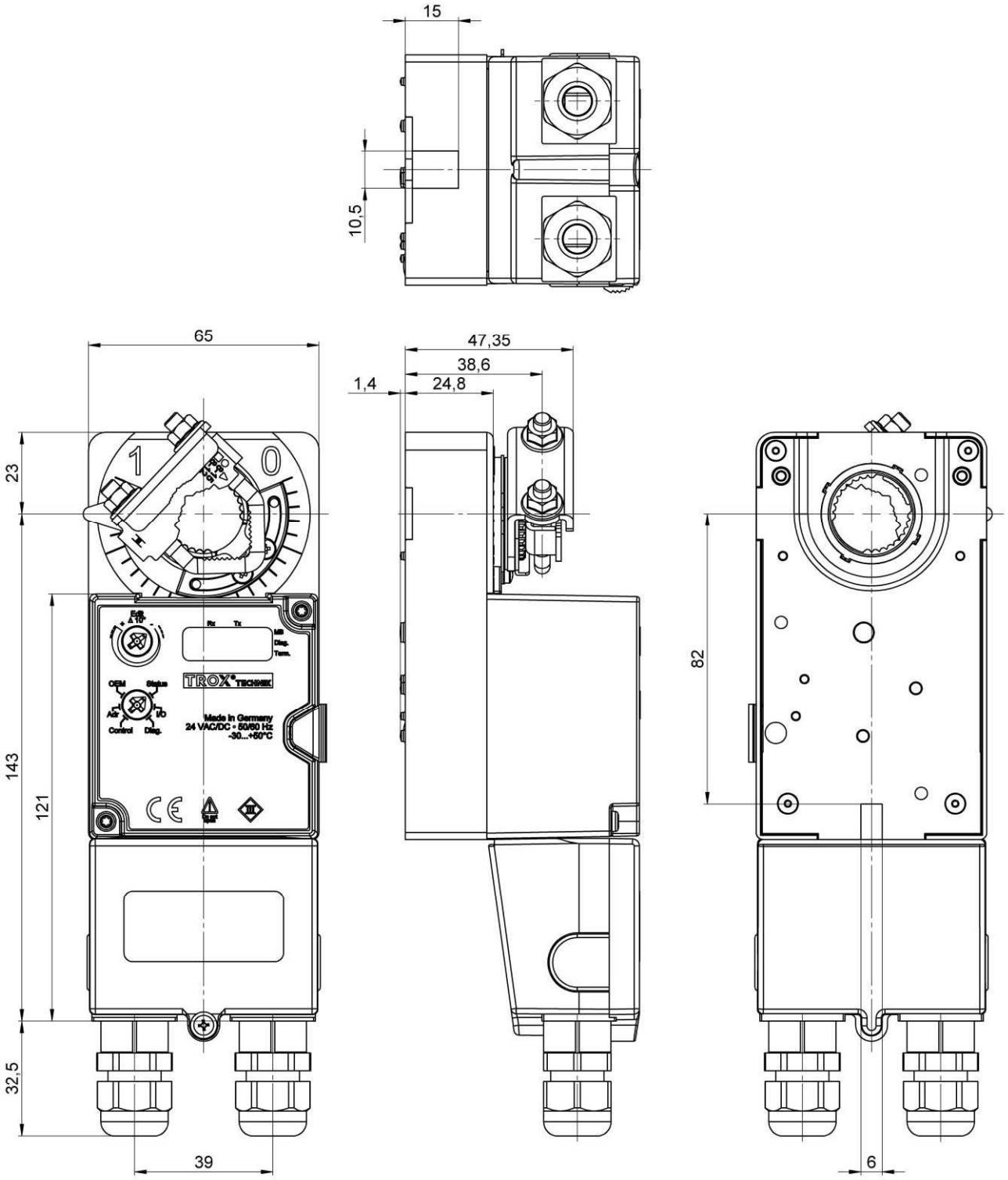

4. Electrical Properties

4.1. 5 Nm / C Controller

Nominal Voltage:	24 V_{AC} (50/60Hz) / $_{DC}$ ±20%
Synchronized speed:	± 5 %
Power consumption:	2,5 W
Standby:	1,0 W
Wire sizing:	4,0 VA
Control:	VAV
Input signal Y (analogue):	(0)2…10 V_{DC} / (0)4…20 mA R_i > 100 kΩ
Output signal U (analogue): Feedback angle	(0)2…10 V_{DC} / max. 0,5 mA (See section 4.5) Supplied by PP-Bus or analogue

4.1.1. CM

Connection scheme	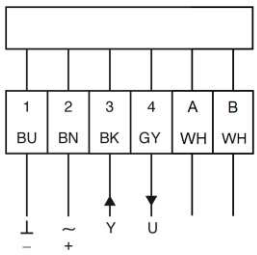

4.1.2. CMX minimum version

Connection scheme	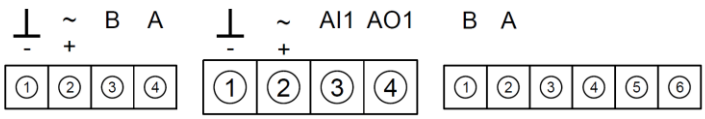

4.1.3. CMX maximum version
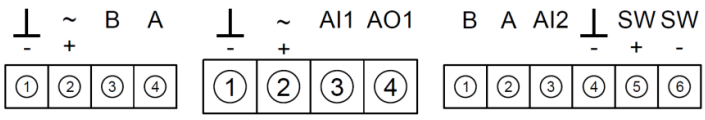
Connection scheme