TROX® TECHNIK
The art of handling air

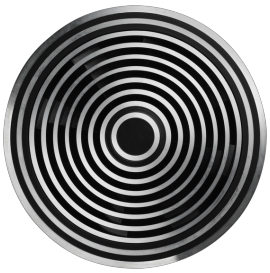

FBA-3

Deburred, black lacquered, visible side turned over

FBA-3-*-SM

Adjustable dirt trap

FBA-4-*-KF

Trim ring with spring clip fixing

FBA-1-VF

With swirl element to adjust the air flow

FBA

ROUND ALUMINIUM AIR DIFFUSERS FOR INSTALLATION IN FLOORS

The different attachments allow a wide range of applications with different air flows, installation conditions and several options for volume flow balancing.

- Nominal sizes: 150, 200 mm
- Volume flow range 1 - 59 l/s or 4 - 213 m³/h
- Annular diffuser contour with different surface structures
- For constant and variable volume flows
- For all types of raised floors
- Horizontal or vertical air flow
- Reduction element adjustable on the front or rear side

- Can be installed with and without trim ring
- The trim ring allows quick and easy installation and removal of the grille inserts for cleaning purposes
- High mechanical strength/breaking resistance > 17 kN
- Ideal for comfort zones

Optional equipment and accessories

- Swirl unit adjustable at the back for manual adjustment between vertical and horizontal air routing
- Trim ring with spring clip fixing to cover the installation opening
- Dirt trap can also be used as a reduction element
- Plenum box

Allgemeine Informationen

Application

- Floor diffusers as supply air diffusers for comfort areas
- Installation in raised floors without plenum box if it is constructed as a pressurised floor
- Installation in raised floors with plenum box to allow individual ventilation in rooms or zones
- Vertical supply air flow, with adjustable swirl unit also horizontal air flow
- Variants with adjustable swirl units can be manually set to vertical or horizontal air routing
- Attractive design element with various types of surfaces, for building owners and architects with demanding aesthetic requirements
- Comfortable and energy-efficient airflow through supporting convection currents in the occupied zone
- Thermal loads are effectively dissipated
- For constant and variable volume flows
- For supply air temperature differences of –12 - +20 K

Special characteristics

- Simple and quick assembly and covering of the installation opening when used with trim ring and spring clip fixing
- Installation in hard flooring requires a spacing ring The spacing ring is included in the delivery if no trim ring has been selected
- High crush resistance > 17 kN
- The grille insert is torsion-proof and centred in combination with trim ring
- With or without swirl unit to allow for various air patterns
- A dirt trap reduces contamination of the floor and facilitates volume flow rate balancing. It can be adjusted from the diffuser front and back surface

Nominal sizes

- 150, 200

Variants

Setting the air flow direction

- -*: no entry: vertical air flow, inalterable
- -V: preset vertical swirling airflow, the swirl vane is manually adjustable
- -H: preset horizontal swirling airflow, the swirl vane is manually adjustable

Installation

- -*-: Floor diffuser with spacing ring
- -KF: Floor diffuser with trim ring and spring clip fixing

Dirt trap

- -*: no entry: without dirt trap
- -SM: with adjustable dirt trap Dirt trap adjustable on the back, the dirt trap can also serve as a reduction element for volume flow rate balancing
- -SV: with adjustable dirt trap Dirt trap adjustable from the diffuser face front, the dirt trap can also serve as a reduction element for volume flow rate balancing

Plenum box

- -*: no entry: without plenum box
- -A: with plenum box for connection to the on-site air duct system

Construction

Surface floor diffuser (floor grille and trim ring)

- -1: Deburred diffuser core
- -3: Deburred diffuser core, painted black, exposed surface overtightened
- -4: Deburred diffuser core, exposed surface overtigthened

Parts and characteristics

Grille insert Floor diffuser

- Ring spacing: 6 mm
- Height-adjustable dirt trap which serves as a reduction element for volume flow rate balancing
- Adjustable swirl unit for vertical or horizontal swirling air flow or air routing

Trim ring with spring clip fixing

- Rotation lock and centring grille insert
- Covers the installation opening
- Spring clip fixing enables different magnitude of the raised floor and the compensation of large cut-out tolerances when creating the installation openings. For the tightest possible fit of the trim ring, we recommend the minimum installation dimension
- Balancing with soft flooring, e.g. carpetWorks well with soft flooring, e.g. carpet

Attachments

- Spacing ring to hold the grille insert for variants without trim ring
- Trim ring with spring clip fixing to accommodate the grille insert and to attach the installation opening
- Adjustable swirl unit for vertical or horizontal swirling air flow
- Fixed swirl unit for vertical air flow (only for nominal size 200)
- Height-adjustable dirt trap which also serves as a reduction element for volume flow rate balancing

Accessories

Plenum box -A:

- For direct connection to the on-site air duct system
- With incorporated air distribution element for a steady flow to the floor diffuser
- Plenum box suitable for all nominal sizes

Material

- Grille insert and trim ring made of die-cast aluminium
- Spring clips made of stainless steel
- Adjustable swirl unit and dirt trap made of ABS plastic, UL94-V-0
- Spacing ring made of plastic ABS UL 94-V-0
- Dirt trap adjustment device and connective marterial made of galvanised steel
- Plenum box made of galvanised sheet steel

Technical data

- Nominal sizes: 150, 200 mm
- Volume flow rate range: 1 – 59 l/s or 4 – 213 m³/h
- Supply air temperature difference: -12 - +20 K
- Crush resistance > 17 kN

TECHNICAL INFORMATION

Function, Technical data, Quick sizing, Specification text, Order code

Floor diffusers allow supply air in mechanical ventilation and air conditioning systems to flow into the room from below or from the floor.
For adaptation to different local conditions, 3 different variants of the air routings are possible.

Vertical flow without adjustment option

Without adjustable swirl unit, the supply air flows vertically into the room at a moderate speed. Since cold air is heavier than warm air, the direction of flow reverses and the supply air flows back towards the floor. A low-turbulence or swell-like flow spreads over the entire floor surface. A lift current forms at heat sources such as people and equipment, so that the air is primarily exchanged in these areas.
This type of hybrid ventilation or mixed-source ventilation is designed exclusively for cooling operation. It is particularly suitable for rooms with a clear division between circulation and occupied areas. These include, for instance, cinema or theatre halls and waiting areas. The maximum supply air temperature difference should not exceed -6 K. The exhaust air should be dissipated in the upper part of the room, above the occupied zone.

Horizontal air flow

An adjustable swirl unit set for vertical flow causes a swirling vertical supply air flow into the room. In doing so, the supply air induces room air near the floor surface and quickly reduces the air velocity as well as the temperature difference between supply air and room air. This type of mixed ventilation is particularly suitable for areas that are permanently intended for people to remain. This includes, for instance, office spaces or meeting and conference rooms.

Vertical swirling air flow

An adjustable swirl blade set for vertical flow causes a swirling vertical supply air flow into the room. Through this process, the supply air induces room air. There is a rapid reduction in flow velocities and a quick reduction of the temperature difference between supply air and room air. This type of mixed ventilation results in proficient room ventilation. It is particularly suitable for areas in which people do not remain for longer periods of time. This includes corridors or similar circulation areas.

Schematische Darstellung

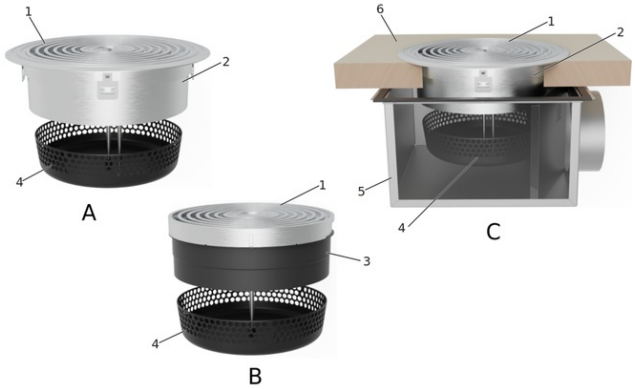

A FBA-…-KF

B FBA

C FBA-…-KF-A

1 Frontdurchlass

2 Gehäuse mit Klemmflansch und Klemmfedern

3 Ausgleichsring

Optional

4 Schmutzfangkorb

5 Anschlusskasten

6 Bodenplatte (bauseitig)

Nominal sizes	150, 200 mm
Volume flow rate range	1 – 59 l/s or 4 – 213 m³/h
Supply air to room air temperature difference	-12 to +20 K
Crush resistance	> 17 kN

,

The quick lay-out provides a proficient overview of the possible volume flow rates, the corresponding sound power levels and pressure differences with horizontal air flow. The minimum volume flow rates apply to a supply air temperature difference of -6 K.The maximum volume flows apply to a sound power level of approx. 50 dB(A) Exact values for all parameters can be determined with our Easy Product Finder design program.

Diffuser only

NS	q_v		Δp_t	L_{wA}
	l/s	m³/h	Pa	dB(A)
150	1	4	0	< 15
	12	43	15	23
	24	86	58	40
	36	128	129	50
200	1	4	0	< 15
	20	73	11	19
	40	143	43	39
	59	213	96	50

With plenum box

NS	q_v		Δp_t	L_{wA}
	l/s	m³/h	Pa	dB(A)
150	1	4	0	< 15
	14	50	16	25
	28	100	62	41
	41	149	138	50
200	1	4	0	< 15
	19	70	10	18
	38	137	38	38
	57	205	86	50

With dirt trap

NS	q_v		H_4 = maximum		H_4 = 45		H_4 = 35	
			Δp_t	L_{wA}	Δp_t	L_{wA}	Δp_t	L_{wA}
	l/s	m³/h	Pa	dB(A)	Pa	dB(A)	Pa	dB(A)
150	1	4	0	< 15	0	< 15	0	< 15
	12	44	14	22	16	19	19	23
	24	87	56	40	63	41	73	43
	36	130	125	50	142	53	162	55

NS	q_v		H_4 = maximum		H_4 = 50		H_4 = 40	
			Δp_t	L_{wA}	Δp_t	L_{wA}	Δp_t	L_{wA}
	l/s	m³/h	Pa	dB(A)	Pa	dB(A)	Pa	dB(A)
200	1	4	0	< 15	0	< 15	0	<15
	19	70	10	18	12	19	13	18
	38	137	38	38	45	39	52	39
	57	205	86	50	101	50	116	52

With plenum box and dirt trap

NS	q_v		H_4 = maximum		H_4 = 45		H_4 = 35	
			Δp_t	L_{wA}	Δp_t	L_{wA}	Δp_t	L_{wA}
	l/s	m³/h	Pa	dB(A)	Pa	dB(A)	Pa	dB(A)
150	1	4	0	< 15	0	< 15	0	< 15
	13	47	14	22	16	20	19	24
	26	94	54	40	63	42	73	44
	39	140	121	50	140	55	163	56

NS	q_v		H_4 = maximum		H_4 = 50		H_4 = 40	
			Δp_t	L_{wA}	Δp_t	L_{wA}	Δp_t	L_{wA}
	l/s	m³/h	Pa	dB(A)	Pa	dB(A)	Pa	dB(A)
200	1	4	0	< 15	0	< 15	0	< 15
	18	64	13	20	14	20	16	20
	35	126	49	39	55	39	61	39
	52	188	110	50	123	50	135	51

Specification text

General information:

Floor diffusers as supply air diffusers for installation in raised floors of all types. Supply air supply either directly via the raised floor if it is construceted as a pressurised floor, or via a plenum box connected to the on-site air duct system.

Diffuser core with curved mullions made of diecast aluminium.

Installation:

With stepped spacing ring made of ABS UL94-V-0 plastic for precise installation in the raised floor
With trim ring and spring clip fixing for easy ASSEMBLAGE with various base plate magnitude from 10 mm. Made of die-cast aluminium, the component centres the grille insert and simultaneously secures it from twisting
Air flow direction:

Without adjustable swirl unit for vertical air flow
With adjustable swirl unit (ABS plastic, UL94-V-0) for vertical or horizontal air flow (factory settings can be changed) If required, the swirl vane can be adjusted manually
Dirt trap:

Without dirt trap, which can be used as a reduction element for volume flow balancing
With dirt trap (ABS plastic, UL94-V-0) that also serves as a reduction element for volume flow rate balancing
Plenum box:

Without plenum box for installation in pressurised floor
With plenum box made of galvanised sheet steel; plenum box with Ø 123 mm spigot for connection to the air duct system
With incorporated air distribution element for a steady flow to the floor diffuser

Equivalence criteria

2 nominal sizes [mm]

- 150
- 200

3 surface textures

- Floor diffuser deburred
- Floor diffuser deburred, black lacquered, visible side overtightened
- Floor diffuser deburred, visible side overtightened

Volume flow rate range

- 1 – 59 l/s or 4 – 213 m³/h

Supply air temperature difference

- -12 to +20 K

Crush resistance

- > 17 kN

FBA	-	3	-	V	-	KF	-	SM	-	A	/	150
|		|		|		|		|		|		|
1		2		3		4		5		6		7

1 Type
FBA Floor diffuser

2 Surface floor diffuser (grille core and trim ring)
1 deburred
3 deburred, painted black, exposed surface skimmed
4 deburred, exposed surface skimmed

3 Airflow direction
No entry: vertical
V vertical, adjustable swirl unit
H horizontal, adjustable swirl unit

4 Installation
No entry: spacing ring for stepped holes
KF Trim ring and spring clips

5 Dirt trap
No entry: without dirt trap
SM flow rate adjustment on the rear side
SV flow rate adjustment on the front side

6 Plenum box
No entry: without plenum box
A with plenum box

7 Nominal size [mm]
150, 200
Order example: FBA-3-V-KF-SM-A/150

Type	FBA
Surface of diffuser core and trim ring	Deburred, painted black, exposed surface skimmed
Airflow direction	Vertical, adjustable swirl unit
Installation	Trim ring with spring clips
Dirt trap	Flow rate adjustment from the underside
Plenum box	With plenum box
Nominal size [mm]	150

Variants, Product details

FBA-1

Surface of grille insert and clamping flange deburred

FBA-3

Surface of grille insert and clamping flange deburred, painted black and visible side skimmed

FBA-4

Surface of grille insert and clamping flange deburred and visible side skimmed

FBA-1-*-KF-SM

With dirt trap, can be adjusted from the underside

FBA-1-*-KF-SV

With dirt trap, can be adjusted from the diffuser face

Floor diffuser with clamping flange, dirt trap with front adjustment and plenum box

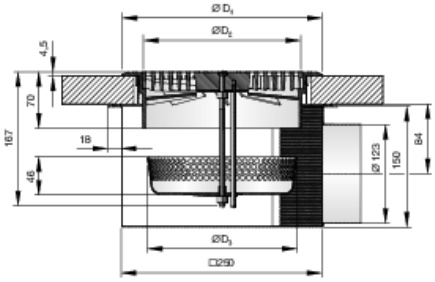

- Installation in pressurised floors without plenum box
- Plan plenum boxes for rooms with individual volume flows and/or supply air temperatures
- For raised floors (from 10 mm panel magnitude) with carpet coverings, use floor diffusers with trim ring for better edge protection
- Trim rings are suitable for compensating tolerances when creating the installation opening. A particularly tight fit is achieved when the minimum dimension of the installation opening is realised
- By installation without a trim ring in a stepped bore, use the supplied spacing ring to ensure the function and height compensation
- Variants with adjustable twist element can be adjusted manually. Setting position H provides a horizontal supply air flow, setting position V provides a vertical supply air flow

The schematic diagrams are provided to illustrate installation details.

Dirt trap setting for volume flow balancing

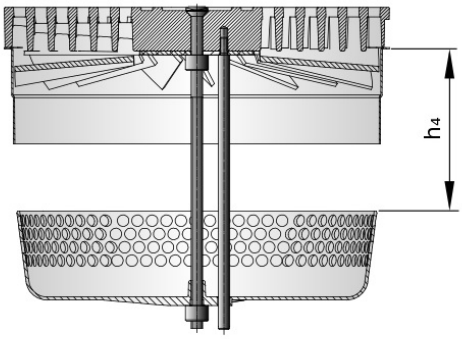

For flow rate balancing (adjusting reduction), the height H_4 is changed between the upper edge of the dirt trap and the lower edge of the floor grille.

Air flow with horizontally adjusted swirl unit

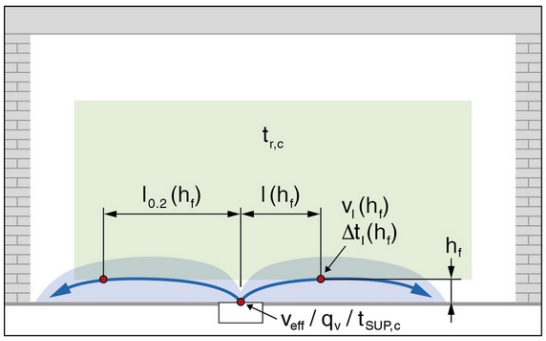
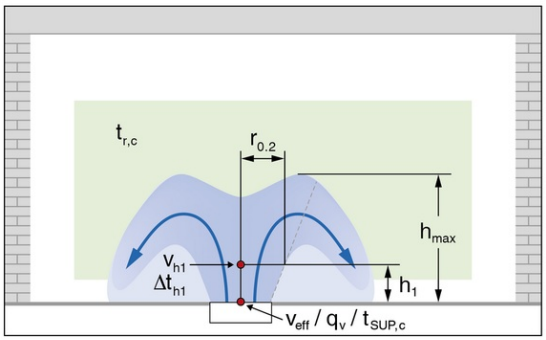
Air flow with vertically adjusted swirl unit