Operating instructions GB/en

Air handling unit

X-CUBE-Ex

for areas with potentially explosive atmospheres

Read the instructions prior to performing any task!

TROX® TECHNIK

The art of handling air

TROX GmbH
Heinrich-Trox-Platz
47504 Neukirchen-Vluyn
Germany
Phone: +49 (0) 2845 2020
Fax: +49 2845 202-265
E-mail: trox@trox.de
Internet: http://www.troxtechnik.com

A00000063216, 1, GB/en
07/2017

© TROX GmbH 2016

About this manual

This operating manual enables operating or service personnel to use the X-CUBE Ex air handling unit (AHU) safely and efficiently in potentially explosive atmospheres.

The operating manual is intended for use by instructed persons.

It is essential that instructed persons (↳ *Chapter 1.3.1 'Qualification' on page 8*) read and fully understand this manual before starting any work. The basic prerequisite for safe working is to comply with the safety notes and all instructions in this manual.

The local regulations for health and safety at work and the general safety regulations for the area of application of the air handling unit also apply.

Illustrations in this manual are mainly for information and may differ from the actual design of the air handling unit.

Other applicable documentation

In addition to these instructions, the following documents apply:

- Transport and installation manual
- Order-specific approval drawing
- Data sheets for components from other suppliers, ↳ Appendix

TROX Technical Service

To ensure that your request is processed as quickly as possible, please keep the following information ready:

- Product name
- TROX order number
- Delivery date
- Brief description of the fault

Online	www.troxtechnik.com
Phone	+49 2845 202-400

Copyright

This document, including all illustrations, is protected by copyright and pertains only to the corresponding product.

Any use without our consent may be an infringement of copyright, and the violator will be held liable for any damage.

This applies in particular to:

- Publishing content
- Copying content
- Translating content
- Microcopying content
- Saving content to electronic systems and editing it

Limitation of liability

The information in this manual has been compiled with reference to the applicable standards and guidelines, the state of the art, and our expertise and experience of many years.

The manufacturer does not accept any liability for damages resulting from:

- Non-compliance with this manual
- Incorrect use
- Operation or handling by untrained individuals
- Unauthorised modifications
- Technical changes
- Use of non-approved replacement parts

The actual scope of delivery may differ from the information in this manual for bespoke constructions, additional order options or as a result of recent technical changes.

The obligations agreed in the order, the general terms and conditions, the manufacturer's terms of delivery, and the legal regulations in effect at the time the contract is signed shall apply.

We reserve the right to make technical changes.

Defects liability

For details regarding defects liability please refer to Section VI, Warranty Claims, of the Delivery and Payment Terms of TROX GmbH.

The Delivery and Payment Terms of TROX GmbH are available at www.troxtechnik.com.

Safety notes

Symbols are used in this manual to alert readers to areas of potential hazard. Signal words express the degree of the hazard.

Comply with all safety instructions and proceed carefully to avoid accidents, injuries and damage to property.

DANGER!

Imminently hazardous situation which, if not avoided, will result in death or serious injury.

WARNING!

Potentially hazardous situation which, if not avoided, may result in death or serious injury.

CAUTION!

Potentially hazardous situation which, if not avoided, may result in minor or moderate injury.

NOTICE!

Potentially hazardous situation which, if not avoided, may result in property damage.

ENVIRONMENT!

Environmental pollution hazard.

Tips and recommendations

Useful tips and recommendations as well as information for efficient and fault-free operation.

Specific safety notes

The following symbols are used in safety notes to alert you to specific hazards:

Warning signs	Type of danger
	Warning – hand injuries.
	Warning – high-voltage.
	Warning – explosive atmosphere.
	Warning – danger zone.

Additional markers

In order to highlight instructions, results, lists, references and other elements, the following markers are used in this manual:

Marker	Explanation
1., 2., 3. ...	Step-by-step instructions
⇨	Results of actions
	References to sections in this manual and to other applicable documents
■	Lists without a defined sequence
[Switch]	Operating elements (e.g. push buttons, switches), display elements (e.g. LEDs)
'Display'	Screen elements (e.g. buttons or menus)

Table of contents

1 Safety

1.1 Correct use

The TROX X-CUBE-Ex air handling unit (AHU) is designed exclusively for the treatment of air, i.e. transporting, filtering, heating, cooling, humidifying and dehumidifying air.

Explosion-proof air handling units carry a rating plate in compliance with the ATEX directive 2014/34/EU. Explosion-proof units must only be used in Ex zones that correspond to their equipment category.

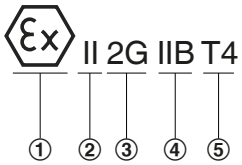

Fig. 1: Ex marking (example)

	Name	Meaning
①	ATEX logo	
②	Equipment group	The air handling unit may be used in areas with potentially explosive atmospheres, but not in mining.
③	Equipment category	Equipment category **2G** is suitable for atmospheres where potentially explosive gases (G) may occur sometimes. Such equipment provides a high level of protection and may be used in zone 1 and zone 2 areas. Equipment category **3G** is suitable for atmospheres where potentially explosive gases (G) are unlikely to occur, or if they do occur, are likely to do so only infrequently and for a short period only. Such equipment provides a normal level of protection and may be used in zone 2 areas.
④	Group of explosive materials	Gases are grouped according to their ignitability, which is based on standard criteria. Units that have been approved for group II B of explosive materials may also be used in group IIA.
⑤	Temperature class	T3 – Possible maximum surface temperature: 200 °C T4 – Possible maximum surface temperature: 135 °C

Correct use also involves complying with all the information provided in this manual.

Any use that goes beyond the correct use or any different use of the unit is regarded as incorrect use.

Incorrect use

WARNING!

Danger due to incorrect use!

Incorrect use of the air handling unit can lead to dangerous situations.

Do not use the air handling unit:

- in an Ex area for which it has not been approved
- for the transport of fluids with a temperature beyond the specified temperature range (*Chapter 9.1 'Operating conditions' on page 48*)
- in rooms
  - with potentially explosive dusts
  - with aggressive room air components, e.g. sand
- near
  - strong electromagnetic fields
  - high frequency sources (e.g. transmitting stations)
  - strong light sources (e.g. laser beams)
  - ionising radiation (e.g. X-ray tubes)
  - ultrasound equipment
- outside of the design specifications, see TROX air handling unit data sheet
- as a structural element or as a roof for a building
- as a smoke extract system in the event of a fire

1.2 System owner's responsibility

System owner

The system owner is a natural or legal person who for commercial or business purposes owns or manages the air handling unit or allows third parties to use or operate it, but continues to bear legal responsibility for the safety of users, staff or third parties while the product is in use.

System owner's obligations

The unit is intended for commercial use. The system owner is therefore subject to the legal obligations of occupational health and safety regulations.

In addition to the safety notes in this manual, the applicable regulations for safety, accident prevention and environmental protection must also be complied with.

In particular:

- The system owner must be aware of the applicable occupational health and safety regulations and carry out a risk assessment to determine any additional hazards that may exist or result from the specific working conditions at the installation location of the air handling unit. The system owner has to create operating instructions for the air handling unit that reflect the results of this risk assessment.
- The system owner has to ensure, throughout the entire operating period of the air handling unit, that these operating instructions conform to applicable standards and guidelines; in case of any deviation, the system owner has to adapt the instructions.
- The system owner must secure the air handling unit to prevent access by unauthorised individuals.
- The system owner must clearly define the responsibilities for operation, maintenance, cleaning, troubleshooting and removal.
- The system owner has to ensure that all individuals who handle or use the air handling unit have read and understood this manual.

  The system owner must regularly provide training for the personnel and inform them of any dangers:
  - Fire and explosion hazards at and near the installation location
  - Local fire and explosion protection measures
  - Position and function of guards
  - Prohibition of smoking
  - Prohibition of open flames and open ignition sources
  - Cleaning, maintenance and repair procedures, tools and materials
  - Personal protective clothing for areas with potentially explosive atmospheres
- The system owner must comply with Directive 1999/92/EC on minimum requirements for improving the safety and health protection of workers potentially at risk from explosive atmospheres. This includes additional organisational measures such as:
  - Designating areas with potentially explosive atmospheres.
  - Creating an explosion protection document for each zone.
  - Preventing unauthorised people from accessing the area or zone.
  - Putting up warning signs.
  - Allowing access by permit only for dangerous jobs to be carried out.
- The system owner must provide the employees with the required personal protective equipment.
- The system owner must observe the local fire regulations.

In addition, the system owner has to ensure that the AHU is in perfect technical condition at all times:

- The system owner must ensure that the maintenance intervals specified in this manual are observed. If the AHU is used beyond average, maintenance intervals should be shorter.
- The system owner must have all safeguards tested regularly to ensure that they are functional and complete.
- The system owner must document and permanently save the control matrix on which commissioning is based. The system owner must save both a digital version and a hardcopy of the initial version of the control matrix.
- The system owner must document and save any changes to the control matrix.

Risk of explosion

WARNING!

Explosion hazard!

If a component or device is to be installed in a system intended for use in potentially explosive atmospheres according to 2014/34/EU, the system owner has to ensure compliance of the entire system with that directive.

Non-compliance may lead to an explosion.

Hygiene requirements

The system owner has to comply with the local regulations and harmonised standards for hygiene requirements. This includes compliance with

- specific maintenance and inspection intervals for AHUs
- specifications for connected ducts and air terminal devices

1.3 Personnel requirements

1.3.1 Qualification

The work described in this manual has to be carried out by individuals with the qualification, training, knowledge and experience described below:

HVAC technician
HVAC technicians are individuals who have sufficient professional or technical training in the field they are working in to enable them to carry out their assigned duties at the level of responsibility allocated to them and in compliance with the relevant guidelines, safety regulations and instructions. HVAC technicians are individuals who have in-depth knowledge and skills related to HVAC systems; they are also responsible for the professional completion of the work under consideration.

HVAC technicians are individuals who have sufficient professional or technical training, knowledge and actual experience to enable them to work on HVAC systems, understand any potential hazards related to the work under consideration, and recognise and avoid any risks involved.

Hygiene inspector
Hygiene inspectors are individuals who have sufficient professional or technical training, knowledge and actual experience to enable them to carry out hygiene inspections on air handling units. Hygiene inspectors have been trained in the field of air hygiene and indoor air quality, and they are familiar with the relevant standards and guidelines.

Instructed person
Instructed persons have been adequately advised or supervised to enable them to avoid any potential hazards related to the work under consideration. Instruction is provided by a qualified expert in the respective field.

A person instructed in the use of the AHU may carry out the following jobs:

- Visual inspections
- Replace filter elements
- Clean filter chambers
- Clean heat exchangers
- Clean fans

Skilled qualified electrician
Skilled qualified electricians are individuals who have sufficient professional or technical training, knowledge and actual experience to enable them to work on electrical systems, understand any potential hazards related to the work under consideration, and recognise and avoid any risks involved.

Skilled qualified electrician for Ex areas
Skilled qualified electricians are individuals who have sufficient professional or technical training, knowledge and actual experience to enable them to work on electrical systems in areas with potentially explosive atmospheres, understand any potential hazards related to the work under consideration, and recognise and avoid any risks involved.

Skilled qualified electricians for Ex areas have special experience, and their training has included instruction on the various types of protection and installation practices and on the general principles of area classification. Evidence of the relevant experience and training claimed must be available.

They know the rules and regulations relevant to their work and to explosion protection, in particular the ATEX directive 2014/34/EU and the related standard EN 60079 as well as IEC Ex standard IEC 60079.

Any work has to be carried out by individuals who can be expected to carry out their assigned duties reliably. Individuals whose reaction time is delayed due to alcohol, drugs or other medication must not carry out any work.

Instruction

System owners must regularly instruct their personnel. The instruction procedure has to be documented for further reference.

At least the following details have to be documented:

- Date of instruction
- Names of persons being instructed
- Type of instruction
- Name of instructor
- Signature of person being instructed

1.3.2 Unauthorised persons

WARNING!

Risk to life! Unauthorised access to the hazardous area and work area must be prevented!

Unauthorised persons who do not fulfil the requirements specified here are usually not aware of the dangers in the work area. There is a risk to life and limb for unauthorised people.

– Keep unauthorised persons away from hazardous areas and work areas.
– Instruct these persons to leave the hazardous area or work area.
– Stop work while unauthorised persons are present in the hazardous area or work area.

1.4 Personal protective equipment

Personal protective equipment is equipment that protects the user against health or safety risks at work.

Personal protective equipment must be worn for various types of work; the protective equipment required is listed in this manual together with the description of each type of work.

Description of personal protective equipment

Hearing protection

Hearing protection protects against hearing damage resulting from noise exposure.

Industrial safety helmet

Industrial safety helmets protect the head from falling objects, swinging loads, and impacts with stationary objects.

Protective clothing

Protective clothing is close fitting, with low tear resistance, close fitting sleeves, and no projecting parts. It prevents entanglement in moving machinery.

Do not wear jewellery.

Protective gloves

Protective gloves are used to protect hands from friction, abrasions, punctures, or deeper injuries.

Safety harness

The safety harness protects personnel from falling when there is an increased risk of falling. The risk of falling is increased when certain height differences are exceeded and the workspace is not secured by a railing.

The safety harness must be worn in such a way that the safety rope is connected to the safety harness and to a secure attachment point; provide shock absorbers if necessary.

Safety harnesses must only be used by personnel who have been specifically trained to use them.

Safety shoes

Safety shoes protect the feet against crushing, falling parts, and slipping on slippery ground.

Safety goggles

Safety goggles protect the eyes from flying particles and liquid splashes.

Explosion protection

WARNING!

Explosion hazard from electrostatic charges!

If you have to work in areas with potentially explosive atmospheres, make sure that no electrostatic charge is built up on non-metallic parts and induced in your body.

To avoid electrostatic charges:

- Wear anti static clothes, shoes, gloves etc.
- For tools, comply with EN 1127-1, appendix A.

The work area should ideally have anti static flooring.

1.5 Safety signs

The following symbols and signs are usually found in the work area. They apply to the very location where they are found.

Ex logo

Fig. 2: Ex logo

Sticker indicating that the AHU may be used in the specified areas with potentially explosive atmospheres.

ATEX rating plate

TROX® TECHNIK		
TROX GmbH Heinrich-Trox-Platz 47504 Neukirchen-Vluyn, Germany	Tel.: +49 (0) 2845 202-0 E-Mail: trox@trox.de www.trox.de	
Produkt:		**X-CUBE Ex**
Geräte-Nr.:		**123456789-1**
Baujahr:		**20xx**
Gewicht:		**xxx kg**
Konformitäts-Nr.:		**EPS 16 ATEX 2 117 X**
Ex-Zone (innen ZUL):		**xxx**
Ex-Zone (innen ABL):		**xxx**
Ex-Zone (außen):		**xxx**

Fig. 3: Rating plate (rating plate for supply air and extract air combination shown)

You will find the rating plate on the operating side of the AHU.

Rating plate explanation ↳ *48*.

For more information on Ex areas ↳ *6*.

Notice – Potentially explosive atmosphere

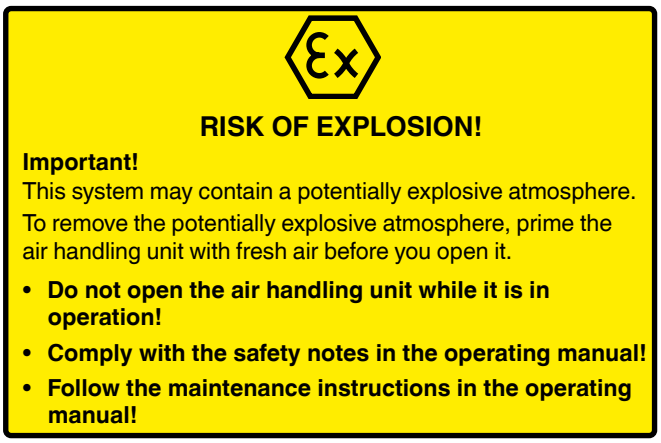

Fig. 4: Notice – Potentially explosive atmosphere

You will find this notice on the AHU. It alerts you to a potentially explosive atmosphere in the AHU. You have to purge the system with outdoor air before you open the AHU.

Notice – Cleaning hazard

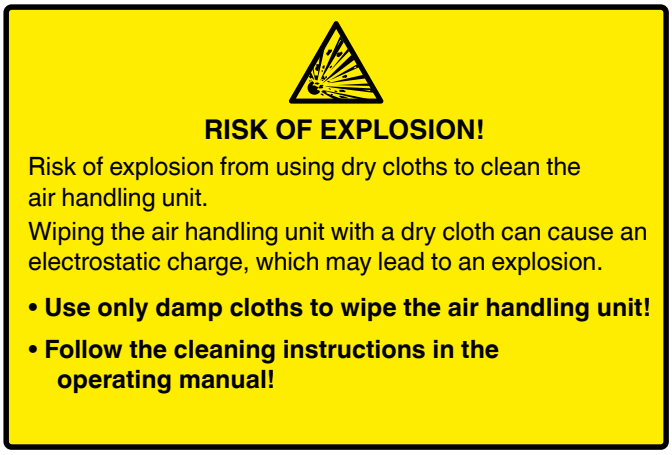

Fig. 5: Notice – Cleaning hazard

You will find this notice on the AHU. It warns you not to use a dry cloth to clean the AHU. Follow the cleaning instructions in the operating manual!

Fan run down time

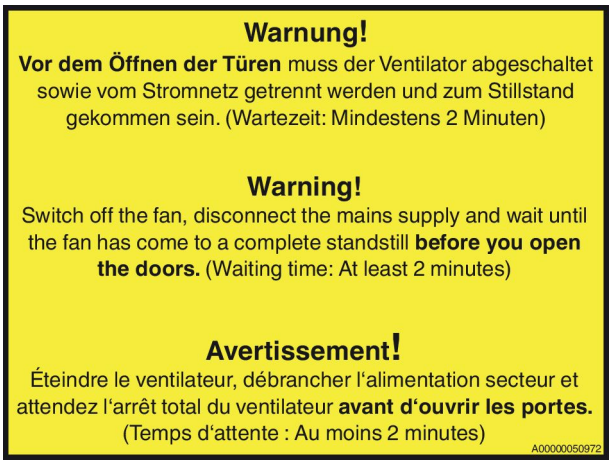

Fig. 6: Notice on inspection access doors

You will find this notice on inspection access doors that allow access to centrifugal fans and rotary heat exchangers.

Electrical voltage

Only skilled qualified electricians must work on AHU components and in internal spaces with this sign.

Unauthorised persons must not enter areas, open cabinets or work on components where an electrical voltage is present and which are hence marked with this symbol.

Earthing

You will find these numbered stickers inside the AHU on all equipotential bonding connection points.

You will also find this sticker on the main equipotential bonding point on the AHU base frame. For more information on equipotential bonding ↳ *'Equipotential bonding' on page 12*.

1.6 Safeguards

Defective safeguards

WARNING!

Risk to life from defective safeguards!

The mains cable between the utility grid and the mains isolator carries a hazardous electrical voltage. Defective or disabled safeguards can cause serious or even fatal injuries.

– Do not disable or bypass any safeguards.

AHU casing

The AHU casing is made from steel panels with duplex powder coating on all sides. This construction ensures that no parts can be ejected from the unit in case of a fault. This construction also protects the interior of the AHU from environmental effects.

The inner skins of the casing are also available in stainless steel (optional).

Local isolator

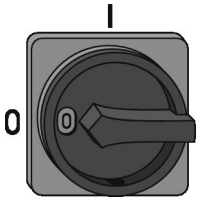

Fig. 7: Local isolator

As long as the AHU remains switched on (mains isolator in 'I' position), the connecting cable for the local isolator is live.

Each local isolator carries a sticker with the code of the equipment that it isolates.

You can lock each local isolator in the '0' position (with a padlock) to secure it against being switched on accidentally so that you can safely work on the respective component (e.g. fan).

Equipotential bonding

A skilled qualified electrician has to connect the AHU to the local earth bar; this is done as part of installation. Equipotential bonding prevents electrostatic ignition hazards.

Safety lock on inspection access doors to hazardous areas

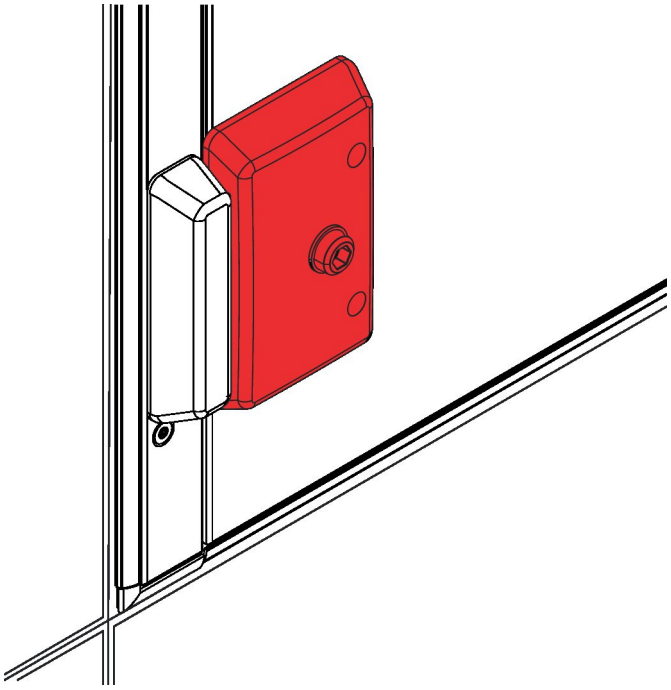

Fig. 8: Safety lock

Inspection access doors to hazardous areas can only be opened with a special key.

Safety catch on discharge side inspection access doors

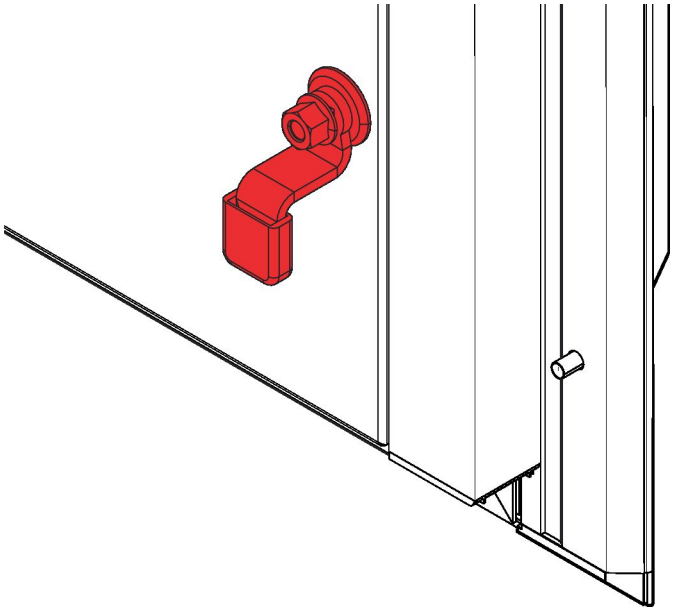

Fig. 9: Safety catch

Each inspection access door on the discharge side is fitted with a safety catch (Fig. 9). The safety catch prevents the inspection access door from suddenly swinging open and injuring people.

Inside door handle

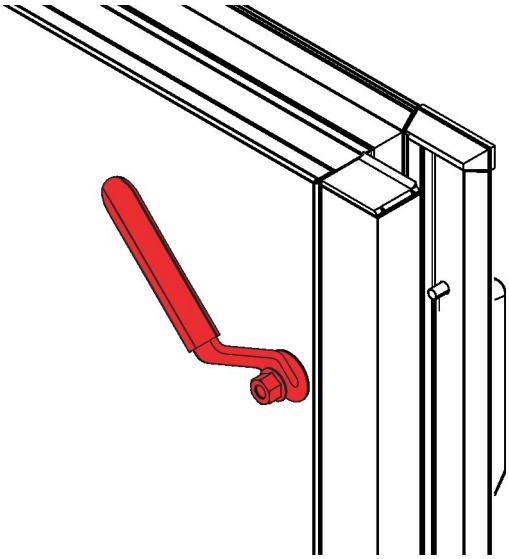

Fig. 10: Inside door handle on an inspection access door

If an AHU casing unit is higher than 1836 mm, the inspection access doors are factory fitted with an inside door handle. The inside door handle prevents people from becoming trapped inside the unit.

Inside door handle with safety catch

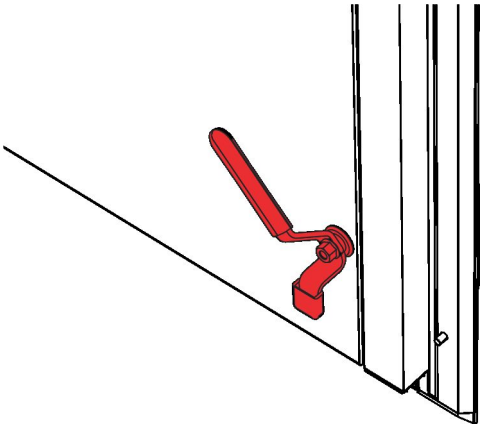

Fig. 11: Inside door handle with safety catch

If an AHU casing unit is higher than 1836 mm, the inspection access doors on the discharge side are factory fitted with an inside door handle with safety catch. This safeguard prevents:

- inspection access doors on the discharge side from swinging open and injuring people
- people from becoming trapped inside the unit

Hold open device

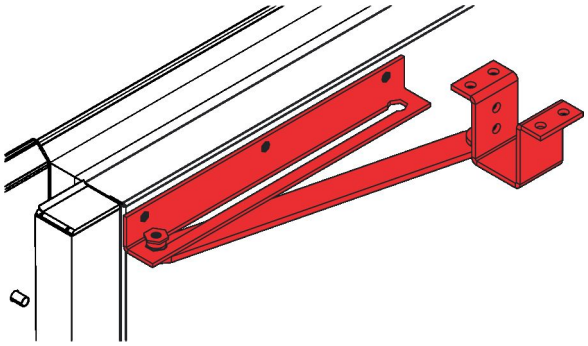

Fig. 12: Hold open device

Each inspection access door is fitted with a hold open device (Fig. 12). The hold open device prevents the inspection access door from being slammed shut by wind.

Motor protection switch

Motor protection switches are safety devices for switching, protecting and isolating motors or actuators on electric circuits. Motor protection switches protect motors against destruction due to overload, short circuits, locking during start-up, or failure of a live wire in three-phase systems. They also have a thermal tripping mechanism and an electromechanic tripping mechanism (short circuit protection). The motor protection switches are located in the AHU switch cabinet.

1.7 Securing the unit against being switched on accidentally

Securing the unit against being switched on accidentally

WARNING!

Risk to life from unauthorised people starting the unit or from people starting the unit accidentally!

If someone who is not authorised starts the unit, or if someone starts the unit accidentally, people could be seriously or even fatally injured.

Before you switch on the unit, make sure that

- nobody is inside the AHU
- all inspection access doors have been closed
- no tools or materials have been left inside the AHU

1. Switch off the AHU at the mains isolator (provided by others).

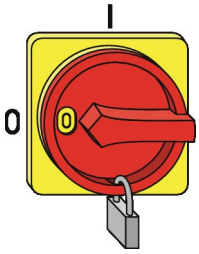

Fig. 13: Securing the mains isolator

2.

> **WARNING!**
>
> **Electric shock hazard!**
>
> The power cable which connects the AHU to the mains holds electrical charges even after power is turned off.

   Switch off the power supply to the AHU by turning the mains isolator to '0'.

3. Secure the mains isolator with a padlock (Fig. 13).
4. Keep the key in a safe place.
5. Cover the mains isolator with a notice informing people that work is in progress.

1.8 Work areas and hazardous areas

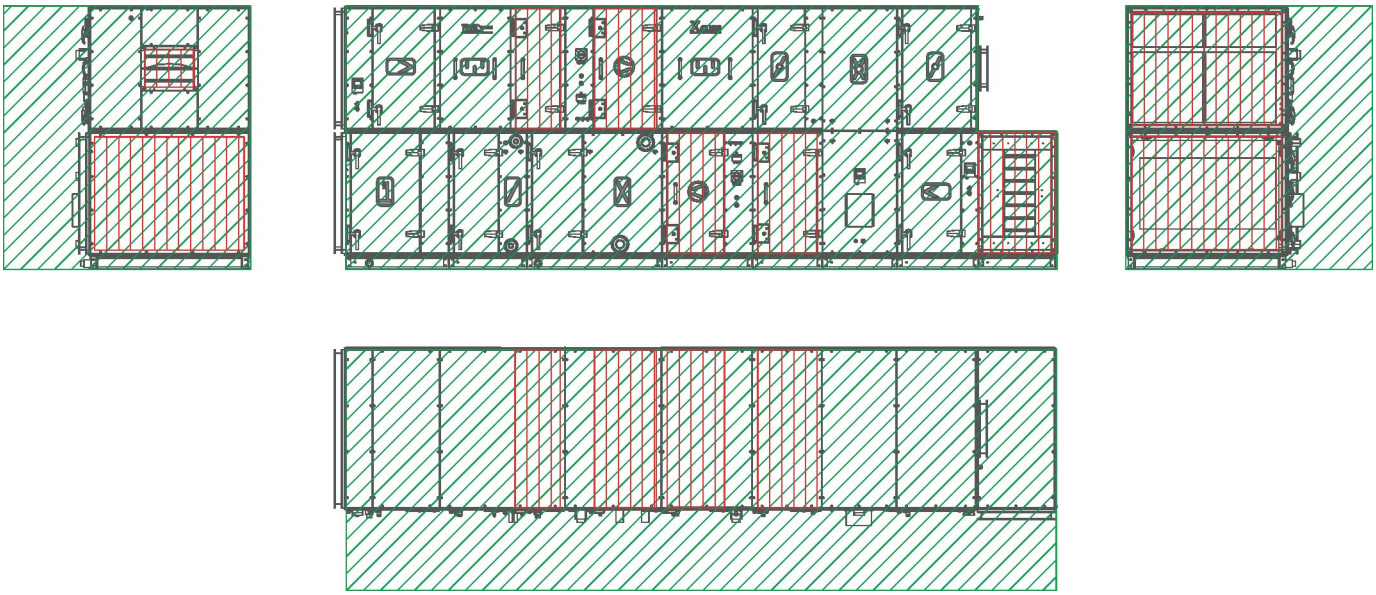

Fig. 14: Hazardous areas

Work areas
Hazardous area

Areas from which you can access

- fans
- electric air heaters
- integral switch cabinets

are hazardous areas. You can access these hazardous areas only after you open an inspection access door.

Before installation is complete, open air inlets and outlets are also considered hazardous areas.

1.9 Areas with with potentially explosive atmospheres

Ex zones on the AHU

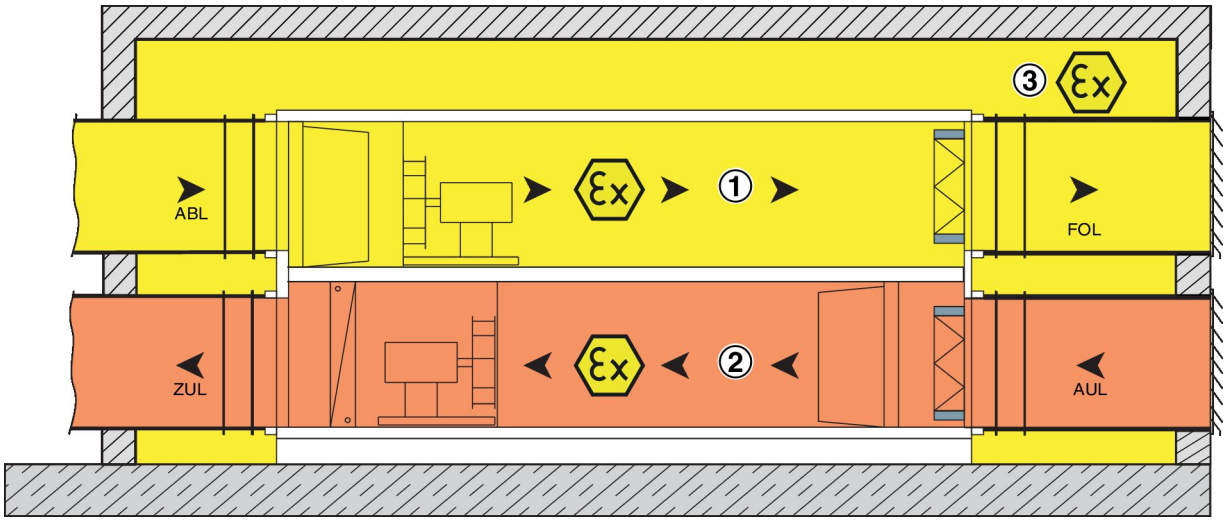

Fig. 15: Ex zones (example)

①	Ex zone inside the AHU (extract air)	ABL	Extract air
②	Ex zone inside the AHU (supply air)	AUL	Outdoor air
③	Ex zone outside the AHU	FOL	Exhaust air
		ZUL	Supply air

There can be one or several Ex zones inside an AHU, depending on the unit design. If an AHU is installed in an Ex zone, i.e. if there is a potentially explosive atmosphere outside (in the environment) of the AHU, the system owner is responsible for marking the Ex zone accordingly.

While the AHU is not in operation, an explosive gas (explosive atmosphere) outside may find its way back into the AHU; this can be prevented with low leakage multileaf dampers (by others) installed in the ducts.

AHUs with different Ex zones:

Two scenarios:

- Inside Ex zone: The AHU transports an explosive gas.
- Outside Ex zone: The AHU is installed in an enclosed space with an explosive gas.

Keep in mind that an explosive gas can mix with the air in the environment (zonal dispersion), either due to normal leakage or when someone opens an inspection access door.

If the atmosphere inside the AHU is more hazardous:

- Ensure sufficient ventilation of the installation room so as to avoid an explosive atmosphere in the room.
- Devices which could become sources of ignition and which are installed up to 1 m or even more from the AHU need to have the same type of protection that applies to the inside of the AHU.

1.10 Specific hazards

The air handling unit is a state-of-the-art product and meets current safety requirements. Residual risks cannot be excluded, however, and you should proceed with caution. This section describes the residual risks that have been identified in a risk assessment.

Always observe the safety notes provided in the following chapters of this manual to reduce health hazards and prevent any hazardous situations.

1.10.1 General hazards in the workplace

Leaks

CAUTION!

Risk of injury from slipping on a contaminated floor!

If a machine or component leaks, liquids may be getting onto the floor. People could slip and injure themselves.

- Remove any liquids on the floor quickly.
- Wear non-slip safety shoes.
- Note the safety data sheets provided by the liquid manufacturers.
- Attach warning notices and mandatory action signs wherever liquids may get onto the floor.

1.10.2 Electric shock hazards

Electric current

DANGER!

Danger of death due to electric current!

Danger of electric shock! Do not touch any live components! Damaged insulation or damaged parts are a life threatening hazard.

- Have work on the electrical system carried out only by skilled qualified electricians.
- If the insulation is damaged, disconnect the power supply immediately and have the insulation repaired.
- Before you start working on electric systems and equipment, switch off the supply voltage and secure it against being switched on accidentally. Comply with the following safety rules:
  - Use the mains isolator to switch off the unit.
  - Secure it against being switched on accidentally.
  - Disconnect the AHU from the mains power supply for the building.
  - Ensure that no voltage is present.
  - Connect to the earth; short circuit connection.
  - Either cover nearby parts that carry a voltage or install barriers.
- Do not bypass or disable any fuses. Be sure to maintain the correct current rating when you replace fuses.
- Ensure that live parts do not come into contact with moisture. Moisture can cause a short circuit.

Stored charges

DANGER!

Risk to life from charges stored in capacitors!

Many components contain capacitors, which may hold electrical charges even after power is turned off. Contact with these components can result in serious or fatal injuries.

- Before you start working on any component that contains capacitors, disconnect the component from the power supply. Then wait for 10 minutes to ensure that the capacitors have become fully discharged.

1.10.3 Explosion hazards

Explosion protection

WARNING!

Risk of explosion!

Ignition sources, such as sparks, open flames or hot surfaces, can lead to explosions in an area with potentially explosive atmospheres.

- Only specially trained personnel must carry out work in an area with potentially explosive atmospheres.
- Get written permission before you start working in an area with potentially explosive atmospheres.
- To remove the potentially explosive atmosphere, purge the air handling unit with fresh air before you open it.
- If you have to carry out work, either ensure that there is no potentially explosive atmosphere, or at least avoid any source of ignition. If you have to work in a zone with potentially explosive atmospheres, use only equipment that has been approved for use in that particular zone.
- If the AHU installation room has not been defined as an Ex zone, the system owner has to ensure sufficient ventilation in the installation room as otherwise normal leakage may result in an explosive atmosphere outside of the AHU (zonal dispersion).

Failure to comply with these safety notes may lead to an explosion.

1.10.4 Moving machinery hazards

Rotating parts of a fan

WARNING!

Risk of injury from rotating parts!

Rotating parts in the fan can cause severe injuries.

- Do not reach into the moving fan or tamper with it.
- Do not open any covers or inspection access panels while the unit is in operation.
- Make sure that the rotor is inaccessible while in operation.
- The fan does not stop immediately! Check that no parts are moving before you open an inspection access door.
- Switch off the system before you start working on movable fan parts and secure it against accidentally being switched on again. Wait until all parts have come to a standstill.

  Switch off the AHU before you start working on movable fan parts and secure it against accidentally being switched on again, *Chapter 1.7 'Securing the unit against being switched on accidentally' on page 13*. Wait until all parts have come to a standstill.

Movable parts of multileaf dampers

WARNING!

Crushing hazard from movable parts!

Closing multileaf dampers may crush your hands and arms.

- Do not reach between the damper blades.
- Prevent access to crush points: Either install dampers on ducts or use fixed guards.
- Before you open an inspection access door, switch off the air handling unit and secure it against being switched on accidentally.

Inspection access doors slamming shut

WARNING!

Risk of crushing from doors slamming shut

Inspection access doors may slam shut by the wind or if someone pushes them inadvertently, resulting in serious injury to the head and hands.

- Secure each inspection access door with a hold open device.
- Do not reach between the door and door frame.
- Wear protective gloves and a hard hat when you open an inspection access door.

1.10.5 Hazards from the hydraulic system

Jet of liquid from a defective hydraulic system

DANGER!

Risk to life from high pressure fluid injection!

If a hose or a pipe or an AHU component becomes defective, a jet of coolant, refrigerant or compressor oil under pressure may escape. The jet of liquid can cause serious injuries as well as frostbite and burns.

- Do not stand or hold objects in the path of a jet of liquid. Keep people away from the hazardous area.
- Immediately initiate an emergency stop. If necessary, initiate further measures to reduce the pressure and stop the jet of liquid.
- Remove escaping liquids and dispose of them correctly.
- Have any defective components repaired immediately.

1.10.6 Hazards from high and low temperatures

Hot surfaces

WARNING!

Risk of injury from hot surfaces!

The surfaces of the heating coil can get very hot during operation. Skin contact with hot surfaces causes severe skin burns.

- Wear heat-resistant protective clothing and gloves whenever you work near a potentially hot surface.
- Before you start working, make sure that all surfaces have cooled down to ambient temperature.

Cold surfaces

WARNING!

Risk of injury from cold surfaces!

The surfaces of the integral refrigeration system and evaporator can cool down to -20 °C while in operation. Skin contact with cold surfaces causes frostbite and cold burns.

- Wear protective clothing and gloves that protect you from the cold when you work near a potentially cold surface.
- Before you start working, make sure that all surfaces have warmed up to ambient temperature.

1.10.7 Hazardous substances and operating fluids

Operating fluids with glycol

WARNING!

Health risk from operating fluids that contain glycol!

The operating fluids in the heating coil, cooling coil and run around coil system contain glycol, which can damage your health if it comes into contact with your skin, if you swallow it or if you inhale the vapour or mist.

- Avoid contact with operating fluids that contain glycol.
- Work must only be carried out by HVAC technicians.
- Do not eat, drink, or smoke while handling operating fluids that contain glycol.
- Wash your hands when you interrupt or finish your work.
- If you have come into contact with an operating fluid that contains glycol, follow the first aid instructions given on the safety data sheet for the operating fluid.
- When you have to handle an operating fluid that contains glycol, wear the personal protective equipment specified in the safety data sheet for the operating fluid.

Lubricants

WARNING!

Health risk from lubricants!

Contact with lubricants can induce allergies and skin irritation.

- Wear protective gloves when handling lubricants.
- Be careful not to swallow lubricants or inhale the vapours.
- If any lubricant has got into your eyes, rinse your eyes thoroughly with plenty of water and seek medical attention if necessary.
- If your skin has come into contact with any lubricant, wash your hands thoroughly with plenty of water and soap.
- Comply with the safety data sheets provided by the lubricant manufacturer.

1.10.8 Fire hazards

Fire protection

WARNING!

Risk of injury from insufficient or inadequate fire-fighting!

If there is a fire and the fire extinguisher is not in working order or is unsuitable for the class of fire, this can result in serious or even fatal injuries and considerable damage to property.

- Make sure that all fire extinguishers are suitable for the expected class of fire.
- Check fire extinguishers every 2 years to ensure that they are in working order.
- Refill each fire extinguisher after it has been used.
- Use only extinguishing agents and replacement parts that comply with the information specified on the fire extinguisher.
- If you have to use a fire extinguisher, make sure you know how to use it safely (see instructions on the extinguisher).

Damaged fan parts

WARNING!

Risk of fire from damaged fan parts!

Grinding rotors or overheating bearings can cause a fire and lead to injury or even death.

- Do not put a damaged or defective fan into operation.
- The power consumption must not exceed the specified nominal current.
- Make sure that the maximum motor speed is not exceeded.

1.10.9 Risk of entrapment in units with whole body access

Risk of entrapment in units with whole body access

WARNING!

Risk of entrapment where there is whole body access into air handling units!

Entrapment in an air handling unit can cause serious injury or even death.

- When you have to work on the air handling unit, secure the air handling unit against being switched on accidentally.
- Before you switch on the air handling unit again, make sure that nobody is inside.

1.11 Environmental protection

! NOTICE!

Risk of harm to the environment due to the incorrect handling of hazardous materials and substances.

Many substances are hazardous. If you handle them incorrectly or dispose of them incorrectly, they can considerably harm the environment.

– If you have to handle or dispose of substances that can harm the environment, follow the instructions below.
– If any hazardous substances have escaped to the environment, immediately take suitable measures to avoid further damage. If you are in doubt, inform the local authorities about the damage and enquire about suitable measures to be taken.

The following substances and materials which are hazardous to the environment are used in this AHU:

Coolant, glycol

Coolants may contain substances that are toxic and hazardous to the environment. They must not be released into the environment. They must be disposed of by a specialist disposal company.

Only use the following glycols for the air handling unit:

- Propylene glycol
- Ethylene glycol

Lubricants

Lubricants such as greases and oils contain toxic substances. Lubricants must not be released into the environment. They must be disposed of by a specialist disposal company.

1.12 Measures to take if a harmful substance has been released

Coolant, glycol

Coolants that contain glycol are hazardous, so please note:

Personal safety:

- Bring people to safety.
- Wear protective equipment.
- Provide sufficient ventilation in work areas, and extract harmful substances.
- Do not inhale vapours or aerosols. Avoid contact with the eyes and skin.

Environmental protection:

- Coolant must not enter sewerage systems or bodies of water. Use collection devices.
- Use sand, earth or a similar absorbent material to absorb any spills, and fill the contaminated material into a container so that it can be safely disposed of.
- If a hazardous substance has been released to a body of water or into the sewerage system, immediately inform the local authorities.

Comply with the safety data sheet provided by the manufacturer.

Lubricants

Comply with the safety data sheet provided by the manufacturer.

Batteries

Batteries contain toxic heavy metals. They are hazardous waste and must be taken to a hazardous waste collection point or disposed of by a specialist company.

2 Functional description

Your air handling unit (AHU) is a bespoke product and has been configured according to your project. A list of all functions is given on the technical data sheets. An illustration and the technical data should already have been provided to you for information and acceptance. We recommend that you keep those documents with this manual.

2.1 Symbols used on the air handling unit

Symbols on the AHU casing indicate which optional components have been installed.

Explanation

Symbol	Meaning
	Filter
	Fan: ▪ Centrifugal fan
	Sound attenuator
	Multileaf damper
	Cooling: ▪ Cooling coil
	Heating: ▪ Heating coil
	Plate heat exchanger
	Run around coil system
	Run around coil system with hydraulic unit
-	Air recirculation chamber
	Pressure transducer
	Differential pressure measuring device
	Connections for heating coil and cooling coil operating fluids
	Condensate drains

Symbol	Meaning
FOL	Exhaust air
ZUL	Supply air
AUL	Outdoor air
ABL	Extract air

2.2 Function of the air handling unit

General function

The AHU consists of several casing units with components. The AHU is used for one or several air treatment functions:

- Circulation
- Filtering
- Heating
- Cooling
- Heat recovery
- Dehumidification

2.3 Operating modes

The operating modes have been configured based on information by the system owner and the manufacturer of the central BMS.

2.4 Function of each component

Filter

The filter cleans the air and removes any contaminants. Filter elements may be of different filter classes, depending on the application. The filter is accessed through an inspection access door so that you can change filter elements easily.

The filter consists of:

- Filter chamber
- Filter frame
- Filter element

Centrifugal fan

The centrifugal fan moves air through the AHU and the entire ventilation system.

The AHU casing unit with the centrifugal fan is a hazardous area; the inspection access door is marked accordingly and allows access for authorised individuals only. Before you access the centrifugal fan, use the mains isolator to switch off the AHU and secure it against being switched on accidentally.

Sound attenuator

The sound attenuator consists of sound attenuator splitters; they reduce noise resulting from fan operation and air treatment. The splitters are accessed through an inspection access door; you can remove them for cleaning.

Multileaf dampers

The multileaf dampers are used to restrict or completely block the airflow. The multileaf dampers are accessed through an inspection access door such that you can clean and maintain them easily.

Cooling coil

If required, the cooling coil cools the supply air to the specified setpoint value. The required cooling energy comes from an external energy source and is transferred to the airflow by a heat exchanger. The cooling coil is accessed through an inspection access door such that you can clean and maintain it easily.

Heating coil

If required, the heating coil heats the supply air to the specified setpoint value. The required heating energy comes from an external energy source and is transferred to the airflow by a heat exchanger. The heating coil is accessed through an inspection access door such that you can clean and maintain it easily.

Plate heat exchanger

The plate heat exchanger consists of stacked plates of corrugated metal which are arranged in such a way that the fluid to be heated and the fluid to be cooled flow through alternating spaces between each two plates.

Run around coil system with hydraulic unit

At least one heat exchanger in the supply air flow and one in the extract air flow are connected via a TROX pump (hydraulic unit) and tubes. This arrangement forms the run around coil system with hydraulic unit. The extract air heat is transferred to the heat transfer medium. The pump supplies the medium to the heat exchanger for the supply air flow. The heat is removed from the heat transfer medium and conveyed to the supply air. The heat transfer medium is connected in counterflow to the airflow. Due to the separate systems, both airflows are completely separate.

Run around coil system

At least one heat exchanger in the supply air flow and one in the extract air flow are connected by a pump (by others) and pipes. This arrangement constitutes a run around coil system. The extract air heat is transferred to the heat transfer fluid in the heat exchanger. The pump moves the heat transfer fluid to the supply air heat exchanger. The heat is then transferred from the heat transfer fluid to the supply air. Connections should be in counterflow so that the heat transfer fluid and the air flow in opposite directions. This ensures that the two airflows are completely separate from each other.

Air recirculation chamber

The air recirculation chamber is a central chamber in the AHU in which air recirculation is controlled by multileaf dampers. Recirculation operation may be anything between 0 and 100%, depending on requirements.

Flexible connectors

Flexible connectors are fitted between the AHU and the ducting. Flexible connectors prevent the transmission of noise and vibrations from the AHU to the ducting; they are also used to accommodate expansion.

2.5 Operating and display elements

2.5.1 Mains isolator

Mains isolator

The air handling unit does not have a factory fitted mains isolator. The mains isolator has to be provided by others.

Local isolator

‘Local isolator’ on page 12

2.5.2 Inspection access doors with a lock

Inspection access doors

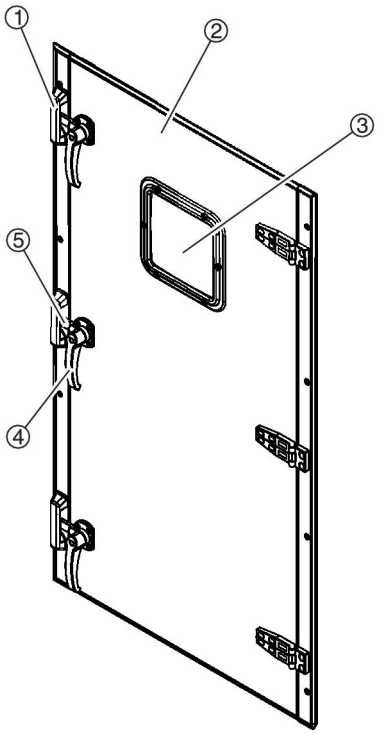

Fig. 16: Inspection access door

1 Lock
2 Inspection access door
3 Inspection window
4 Lever
5 Latch

Inspection access doors (Fig. 16/2) are located at the front of the AHU; they allow you to access various AHU components. Some doors are fitted with an inspection window (Fig. 16/3).

The inspection access doors are closed with a latch (Fig. 16/5) and lock (Fig. 16/1); depending on the AHU component, the door can be opened with a handle (Fig. 16/4) or requires a special key (not shown).

Each inspection access door is fitted with several safeguards:

- *Safety catch*
- *Inside door handle*
- *Inside door handle with safety catch*
- *Safety lock*

2.5.3 Differential pressure measuring device

Differential pressure measuring devices

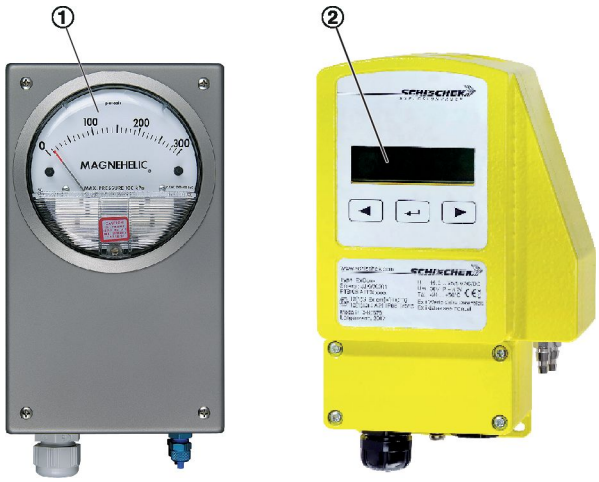

Fig. 17: Differential pressure measuring devices

Differential pressure measureing devices are installed on the operating side of the air handling unit, on each filter. The AHU may have been fitted with analogue or digital differential pressure measuring devices.

The measuring devices are used to measure the air pressure upstream and downstream of each filter. The differential pressure is indictated either on the analogue gauge (Fig. 17/1) or displayed on the digital measuring device (Fig. 17/2). The higher the differential pressure, the higher the resistance of the filter element and hence the contamination level.

2.6 Connections and interfaces

Duct connections of the air handling unit

Duct connection	Meaning
Extract air (ETA/ABL)	Duct through which the extract air from rooms enters the AHU.
Supply air (SUP/ZUL)	Duct through which the supply air flows from the AHU into rooms.
Outdoor air (ODA/AUL)	Duct through which outdoor air enters the AHU.
Exhaust air (EHA/FOL)	Duct through which air is led outside.

Connections for heating coil and cooling coil operating fluids

Used to lead the heat transfer fluid (by others) into the heating coil or cooling coil and out again.

Condensate drains

Used to discharge condensate.

Cable glands

The casing panels of components that need supply voltage or a control cable (such as fans, actuators, anti-frost thermostats) are fitted with cable glands.

3 Operation

3.1 Safety notes regarding operation

Incorrect operation

WARNING!

Risk of injury from incorrect operation!

Incorrect operation can cause serious injuries and considerable damage to property.

- Read the operating manual.
- Follow the instructions in in this manual.
- Before you start working, ensure that:
  - all inspection access doors and covers have been closed.
  - all safeguards have been installed and function correctly.
  - nobody is inside the AHU.
- Do not open any covers or inspection access doors while the unit is in operation.
- Do not disable or bypass any safeguards while the unit is in operation.

3.2 Emergency switch-off

- Switch off the mains isolator and secure it against being switched on accidentally, *Chapter 1.7 'Securing the unit against being switched on accidentally' on page 13*.
- Raise the alarm.
- If there is no risk to your own health, rescue other people from the hazardous area.
- Notify the emergency services.
- Provide first aid.
- Get yourself to safety. Take people in danger with you.

3.3 Switch-off in the event of a fire

The owner of the ventilation and air conditioning system has to include the air handling unit in the fire protection strategy for the building. The system owner has to define the steps to be followed in the event of a fire.

3.4 Preparing a (re)start

Risk of entrapment in units with whole body access

WARNING!

Risk of entrapment where there is whole body access into air handling units!

Entrapment in an air handling unit can cause serious injury or even death.

- When you have to work on the air handling unit, secure the air handling unit against being switched on accidentally.
- Before you switch on the air handling unit again, make sure that nobody is inside.

Before you start the AHU

Before you start the AHU, ensure that:

- Nobody is inside the AHU and no objects have been left inside the AHU.
- All filter elements have been inserted and are intact.
- All connections for water, electricity etc. are intact and open.
- The AHU casing has been completely closed.
- Ventilation (if required) in the installation room has been switched on.

3.5 Starting the air handling unit

Switching the mains isolator on

Personnel:

- Instructed person

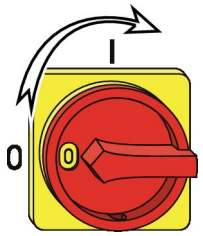

Fig. 18: How to turn the mains isolator

1. Turn the mains isolator (provided by others) for the AHU to the 'I' position.
2. Start up the AHU from the central BMS (by others) and according to the system owner's instructions.

   ⇨ The AHU is now ready for operation.

3.6 Checks during operation

The following checks must be carried out each week while the air handling unit is in operation:

- Check the differential pressure on the filter, *Chapter 3.10 'Reading the differential pressure on the filter' on page 28.*
- Check the system pressure of the heat exchanger operating fluids according to the instructions of the system manufacturer (system by others).
- Check the air handling unit for faults.
- Check the air handling unit for leakage.
- Check fans for faults, e.g.:
  - Unusual vibration
  - Grinding rotor
  - Foreign objects caught in the cover grille

WARNING!

Risk of explosion!

Unusual vibration of the fans poses a hazard which is why the fans have to be monitored, e.g. by frequent visual checks.

We recommend using an electronic vibration monitoring system.

3.7 Tips for operation

Follow the maintenance schedule

Follow the maintenance schedule to ensure economic and energy-efficient operation of each AHU component. If a filter is contaminated, the fan and the entire AHU consume more power.

Keep the building usage in mind

Ensure that the operating mode of the AHU fits the requirements of the building. If the building usage changes, you may have to adapt the operating mode.

Demand-based control

Demand-based control ensures optimum operation and prevents excessive energy consumption.

3.8 Shutting the AHU down

Personnel:

- Instructed person

1. Shut down the air handling unit from the central BMS (by others) and according to the system owner's instructions.
2. Secure the AHU against being switched on accidentally, *Chapter 1.7 'Securing the unit against being switched on accidentally' on page 13.*

   ⇨ The AHU has been secured against being switched on accidentally. It is safe to start working now.

3.9 After shutdown

Decommissioning

WARNING!

Risk of injury from incorrect decommissioning!

Incorrect decommissioning may lead to dangerous situations.

- Appoint an HVAC technician for decommissioning.
- Appoint a skilled qualified electrician and refrigeration technician for decommissioning.

Decommissioning if there is a risk of frost

A decommissioned AHU has to be protected from frost. If only water (without any additives) has been used as a heat transfer fluid, you have to drain the following components:

- Heating coil
- Cooling coil
- Condensate drip trays
- Drain traps
- Run around coil system

Downtime of 3 months or longer

If downtime lasts 3 months or longer

- Physically disconnect the entire AHU from the mains.
- Ensure that any residual energy is dissipated.
- Remove and dispose of any operating fluids, auxiliary materials and leftover processing materials in an environmentally sound manner.

Downtime of 1 year or longer

If downtime lasts 1 year or longer

- Replace the bearings.
- If an automatic lubricator for the bearings is in place, remove the used lubricant and replace it with new lubricant; follow the instructions of the fan manufacturer.
- Remove the droplet eliminator and demister for cleaning.

Removing motors

Use only suitable and approved equipment to lift and move motors. If, for example, an integral cross bar and trolley are used to remove a fan motor, ensure that the unit remains stable, e.g. by fixing it to the building structure.

3.10 Reading the differential pressure on the filter

Reading the differential pressure measuring devices

Personnel:

- Instructed person

Protective equipment:

- Industrial safety helmet

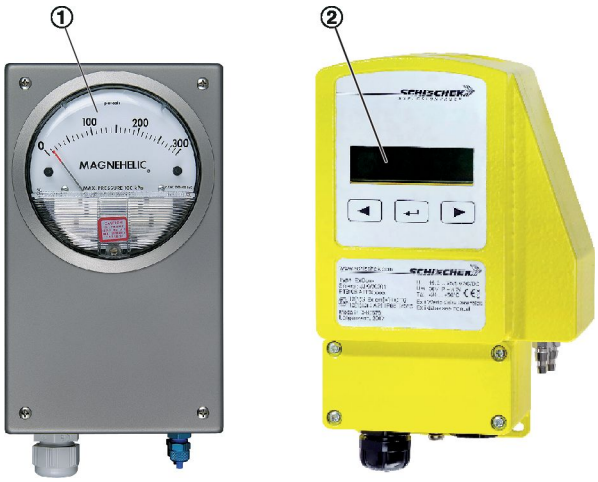

Fig. 19: Analogue and digital differential pressure measuring devices

- Read the differential pressure on the analogue gauge (Fig. 19/1) or on the digital display (Fig. 19/2).
  - ⇨ If the maximum final differential pressure has been reached, you have to replace the filter element, *Chapter 4.4.4 'Replacing a filter element' on page 38*.

> *The maximum final differential pressure (ΔP_{max}) for a filter is given on a sticker on the inspection access door to the filter chamber.*

4 Maintenance

The air handling unit requires regular maintenance. Regular care and maintenance ensure operational readiness, functional reliability and long service life of the air handling unit.

Maintenance can also be performed by the TROX Technical Service (optional) (↳ 'TROX Technical Service' on page 3).

4.1 Safety notes regarding maintenance

WARNING!

Risk of explosion!

Ignition sources, such as sparks, open flames or hot surfaces, can lead to explosions in an area with potentially explosive atmospheres.

- Only specially trained personnel must carry out work in an area with potentially explosive atmospheres.
- Get written permission before you start working in an area with potentially explosive atmospheres.
- To remove the potentially explosive atmosphere, purge the air handling unit with fresh air before you open it.
- If you have to carry out work, either ensure that there is no potentially explosive atmosphere, or at least avoid any source of ignition. If you have to work in a zone with potentially explosive atmospheres, use only equipment that has been approved for use in that particular zone.

Failure to comply with these safety notes may lead to an explosion.

Incorrect maintenance

WARNING!

Risk of injury from incorrect maintenance!

Incorrect maintenance can cause serious injuries and considerable damage to property.

- Before you start maintenance, switch off the air handling unit and secure it against being restarted accidentally.
- Have only authorised persons carry out maintenance.
- Before you start, make sure that there is sufficient clearance for the work you have to complete.
- Keep the work area tidy and clean. Parts and tools that are loosely stacked or left lying around are a source of accident.
- When you reinstall previously removed parts, follow the correct procedure, use all fixing elements and tighten all screws with the correct torque.
- Before you recommission the unit, make sure that:
  - All maintenance jobs have been completed according to this manual.
  - Nobody is inside the AHU.
  - All inspection access doors and covers have been closed.
  - All safeguards have been installed and function correctly.

Rotating parts of a fan

WARNING!

Risk of injury from rotating parts!

Rotating parts in the fan can cause severe injuries.

- Do not reach into the moving fan or tamper with it.
- Do not open any covers or inspection access panels while the unit is in operation.
- Make sure that the rotor is inaccessible while in operation.
- The fan does not stop immediately! Check that no parts are moving before you open an inspection access door.
- Switch off the system before you start working on movable fan parts and secure it against accidentally being switched on again. Wait until all parts have come to a standstill.

  Switch off the AHU before you start working on movable fan parts and secure it against accidentally being switched on again, *Chapter 1.7 'Securing the unit against being switched on accidentally' on page 13*. Wait until all parts have come to a standstill.

Movable parts of multileaf dampers

WARNING!

Crushing hazard from movable parts!

Closing multileaf dampers may crush your hands and arms.

- Do not reach between the damper blades.
- Prevent access to crush points: Either install dampers on ducts or use fixed guards.
- Before you open an inspection access door, switch off the air handling unit and secure it against being switched on accidentally.

4.2 Switching off the AHU and securing it against being switched on accidentally

Explosion protection

WARNING!

Risk of explosion!

A potentially explosive atmosphere may prevail inside the AHU. If you switch the AHU off, the explosive gas concentration and consequently the risk of an explosion may increase.

- It may be necessary to purge the entire system with fresh air before you switch it off.
- Avoid any source of ignition while you carry out maintenance.
- Check the explosive gas concentration (using a measuring device) before you start maintenance and while you carry out maintenance.

Before you start maintenance, switch off the AHU and secure it against being switched on accidentally:

- *Chapter 3.8 'Shutting the AHU down' on page 27*
- *Chapter 1.7 'Securing the unit against being switched on accidentally' on page 13*

4.3 Maintenance plan

The following sections describe the maintenance jobs required to ensure efficient and fault-free operation.

If during regular checks you detect increased wear, change the maintenance intervals accordingly and carry out more frequent checks for wear and tear. If you have any questions about maintenance and maintenance intervals, contact the TROX Technical Service, *‘TROX Technical Service’ on page 3*.

You may also commission the TROX Technical Service to carry out maintenance (‘TROX Technical Service’ on page 3).

AHU hygiene inspection

Interval	Maintenance work	Personnel
Every three years	Check AHU for hygienic conditions.	Hygiene inspector

Ducting and air terminal devices

Interval	Maintenance work	Personnel
Every 6 months	Check supply air and extract air terminal devices for contamination, damage and corrosion. If necessary, clean and repair them according to the manufacturer's instructions.	Instructed person
	Check external weather louvres for contamination, damage and corrosion. If necessary, clean and repair them according to the manufacturer's instructions.	Instructed person
	Check ducts for damage. If necessary, repair them according to the manufacturer's instructions.	Instructed person
	Check flexible connectors for leakage, correct function and damage. If necessary, repair them according to the manufacturer's instructions.	Instructed person
Every 12 months	Clean supply air and extract air terminal devices.	Instructed person
	Check outdoor air and exhaust air terminal devices for contamination, damage and corrosion. If necessary, clean and repair them according to the manufacturer's instructions.	Instructed person
	Check the inside of ducts in at least 2 spots for contamination, damage, corrosion and condensation. If necessary, check further spots and determine whether cleaning is required.	Instructed person
	Check flexible connectors for leakage, correct function and damage.	Instructed person

Explosion protection

Interval	Maintenance work	Personnel
Every month	Check equipotential bonding of the AHU: ▪ AHU casing – Doors – Spigots and connectors for duct connection ▪ AHU components: – Filter – Cooling coil – Heating coil – Multileaf dampers – Centrifugal fans – Sound attenuator – Plate heat exchanger – Refrigeration system – evaporator ▪ Connected systems such as: – Ducts – Pipes Check all equipotential bonding cables and ground cables for secure seating and wear. Fix any connections that may have come loose; replace damaged, corroded or lost cables.	Instructed person
Every 3 months	Perform measurements to ensure that the equipotential bonding for the AHU and for all attachments is effective.	Skilled qualified electrician for Ex areas

AHU casing

Interval	Maintenance work	Personnel
Every month	Visually check the interior and exterior of the AHU for contamination, damage and corrosion. Clean if necessary.	Instructed person
	Check if warning signs have been attached and if they are legible; replace, if necessary.	Instructed person
	Check interfaces of AHU casing units for leakage.	Instructed person
	Check panel seals and fasteners for firm fit and function.	Instructed person
	Check all equipotential bonding cables and ground cables for secure seating and wear. Fix any connections that may have come loose; replace damaged, corroded or lost cables.	Instructed person
Every 12 months	Check casing for condensation build-up.	Instructed person

Filter

Interval	Maintenance work	Personnel
Every month	Visually check filter element for contamination, *Chapter 3.10 Reading the differential pressure on the filter' on page 28*. Replace filter element if the maximum differential pressure is exceeded, *Chapter 4.4.4 Replacing a filter element' on page 38*.	Instructed person
	Check filter element for odours and moisture penetration. Replace filter element, if necessary, *Chapter 4.4.4 Replacing a filter element' on page 38*.	Instructed person
	Check filter frames and clamping rails for contamination, secure seating, damage and corrosion. Clean if necessary.	Instructed person

Interval	Maintenance work	Personnel
Every 6 months	Measure and check the differential pressure of all filters.	Instructed person
Every 12 months	Replace filter elements of the first stage, *Chapter 4.4.4 'Replacing a filter element' on page 38*.	Instructed person
	Check filter frames and clamping rails for secure seating, damage and corrosion.	Instructed person
	Check filter monitoring function.	Instructed person
Every two years	Replace filter elements of the second stage, *Chapter 4.4.4 'Replacing a filter element' on page 38*.	Instructed person

Cooling coil

Interval	Maintenance work	Personnel
Every 3 months	Check dehumidifying cooling coil, condensate drip tray and droplet eliminator for contamination, damage, corrosion and leakage. Clean and repair if necessary.	Instructed person
	Check function of condensate drain and drain trap. Clean and repair if necessary.	Instructed person
Every 6 months	Check heat exchanger for contamination, damage, corrosion and leakage.	HVAC technician
Every 12 months	Check function of feed and return pipes.	HVAC technician

Heating coil

Interval	Maintenance work	Personnel
Every 6 months	Check heat exchanger for contamination, damage, corrosion and leakage.	HVAC technician
Every 12 months	Check function of feed and return pipes.	HVAC technician

Multileaf dampers

Do not use oil or grease on multileaf dampers with gears.

Interval	Maintenance work	Personnel
Every 6 months	Visually check for contamination, damage and corrosion.	Instructed person
	Check whether damper blades move smoothly.	Instructed person
	Check function of damper bearings and linkage.	Instructed person
Every 12 months	Check actuator function.	HVAC technician

Electric motors

Interval	Maintenance work	Personnel
Every 6 months	Visually check for contamination, damage and corrosion.	Instructed person
	Check motors for bearing noise.	Instructed person
Every 12 months	Check electrical connections.	Skilled qualified electrician
	Measure current consumption and compare it with nominal current.	Skilled qualified electrician
	Check all safeguards for correct function.	Skilled qualified electrician

Centrifugal fan with direct drive

Interval	Maintenance work	Personnel
Every week	Check fans visually and aurally for vibration. In case of vibration, switch the unit off and have the fan repaired. This check is not required if you use a vibration monitoring system.	Instructed person
Every 3 months	Check the equipotential bonding. Repair if necessary.	Skilled qualified electrician for Ex areas
Every 6 months	Visually check for contamination, damage and corrosion. Clean if necessary.	Instructed person
	Visually check anti-vibration elements for damage and correct function.	Instructed person
	Check seals for fit and damage.	Instructed person
	Check impeller for imbalance.	Instructed person
	Check motor for bearing noise.	Instructed person

Pumps

Interval	Maintenance work	Personnel
Every 6 months	Check for contamination, damage and corrosion. Clean if necessary.	Instructed person
	Check flanges and stuffing boxes for leakages.	Instructed person
	Check pump function.	HVAC technician

Control valves

Interval	Maintenance work	Personnel
Every 6 months	Visually check for contamination, damage and corrosion. Clean if necessary.	Instructed person
	Check connections and free movement.	Instructed person
Every 12 months	Check function of control valves.	HVAC technician

Sound attenuator

Interval	Maintenance work	Personnel
Every 6 months	Visually check for contamination, damage and corrosion. Clean if necessary.	Instructed person

Air recirculation chamber

Interval	Maintenance work	Personnel
Every 6 months	Visually check air recirculation chamber for contamination, damage and corrosion. Clean if necessary.	Instructed person
	Check whether damper blades move smoothly.	Instructed person
	Check function of damper bearings and linkage.	Instructed person

Plate heat exchanger

Interval	Maintenance work	Personnel
Every 3 months	Check condensate drain, condensate drip tray and drain trap for correct function and contamination. Clean if necessary.	Instructed person
Every 6 months	Visually check plate heat exchanger for contamination, damage and corrosion. Clean if necessary.	Instructed person
	Check heat exchanger for leakages.	Instructed person

Electrical components and devices

Interval	Maintenance work	Personnel
Every 6 months	Visually check sensors for contamination, damage and corrosion. Clean if necessary.	Instructed person
Every 12 months	Check sensor connections.	Skilled qualified electrician
	Check sensor function.	Skilled qualified electrician
	Check actuators for contamination, damage and corrosion.	Instructed person
	Check actuator input signals, and check operating and adjustment ranges.	Skilled qualified electrician
	Check anti-frost thermostat.	Instructed person
	Check frequency inverter.	Skilled qualified electrician
	Check fan vibration monitoring system.	Skilled qualified electrician
	Check local isolators.	Skilled qualified electrician
	Check CO sensor.	Skilled qualified electrician

4.4 Maintenance

4.4.1 Opening inspection access doors

4.4.2 Checking filters for contamination

Check the differential pressure to see if the filter has been contaminated, *Chapter 3.10 'Reading the differential pressure on the filter' on page 28*.

If the maximum differential pressure is exceeded, replace the filter, *Chapter 4.4.4 'Replacing a filter element' on page 38*.

The maximum differential pressure is given on a sticker on the revision access door to the filter chamber.

4.4.3 Cleaning the AHU

General cleaning procedure

Unless specified otherwise, use

- lint free cloths
- non-corrosive and silicone free cleaning agents

to clean the AHU.

WARNING!

Explosion hazard from electrostatic charges!

– To prevent electrostatic ignition hazards, use only a damp cloth to clean surfaces and plastic parts.
– Use only cleaning materials that cannot cause an electrostatic ignition hazard.

When you remove dirt or dust, ensure that it does not get into adjacent parts of the system. Remove dirt and dirty water carefully and dispose of them correctly.

Special regulations or guidelines may apply to the cleaning of AHUs in the pharmaceutical and food industries and in hospitals; be sure to comply with them.

Cleaning the heating coil

WARNING!

Risk of injury from hot surfaces!

The surfaces of the heating coil can heat up to 100 °C during operation. Skin contact with hot surfaces causes severe skin burns.

– Wear heat-resistant protective clothing and gloves whenever you work near a potentially hot surface.
– Before you start working, make sure that all surfaces have cooled down to ambient temperature.

CAUTION!

Danger of injury from sharp edges, sharp corners and thin sheet metal parts!

Sharp edges, sharp corners and thin sheet metal parts of the heating coil may cause cuts or grazes.

– Be careful when you are working on the heating coil.
– Wear protective gloves, safety shoes and a hard hat.

Clean the heating coil while installed; remove it only if it is otherwise not accessible.

Ensure the following:

- Use only water, compressed air or a vacuum cleaner.
- Do not use any high pressure cleaner or high pressure steam cleaner.
- Be careful so as not to bend any blades.
- Use only cleaning agents with a pH value between 7 and 9.
- Prevent dirt and dust from getting into adjacent parts of the system.
- Carefully remove dirt and dirty water.
- Dispose correctly of dirt and dirty water.

Cleaning the cooling coil

WARNING!

Risk of injury from cold surfaces!

The surfaces of the cooling coil can cool down to -20 °C during operation. Skin contact with cold surfaces causes frostbite and cold burns.

– Wear protective clothing and gloves that protect you from the cold when you work near a potentially cold surface.
– Before you start working, make sure that all surfaces have warmed up to ambient temperature.

CAUTION!

Danger of injury from sharp edges, sharp corners and thin sheet metal parts!

Sharp edges, sharp corners and thin sheet metal parts of the cooling coil may cause cuts or grazes.

– Be careful when you are working on the cooling coil.
– Wear protective gloves, safety shoes and a hard hat.

Clean the cooling coil while installed; remove it only if it is otherwise not accessible.

Ensure the following:

- Use only water, compressed air or a vacuum cleaner.
- Do not use any high pressure cleaner or high pressure steam cleaner.
- Be careful so as not to bend any blades.
- Use only cleaning agents with a pH value between 7 and 9.
- Prevent dirt and dust from getting into adjacent parts of the system.
- Carefully remove dirt and dirty water.
- Dispose correctly of dirt and dirty water.

Cleaning the plate heat exchanger

CAUTION!

Danger of injury from sharp edges, sharp corners and thin sheet metal parts!

Sharp edges, sharp corners and thin sheet metal parts of the plate heat exchanger may cause cuts or grazes.

– Be careful when you are working on the plate heat exchanger.
– Wear protective gloves, safety shoes and a hard hat.

Clean the plate heat exchanger while installed; remove it only if it is otherwise not accessible.

Ensure the following:

- Use only water, compressed air or a vacuum cleaner.
- Do not use any high pressure cleaner or high pressure steam cleaner.
- Direct air jets or water jets only at an angle of 90° onto surfaces.
- Be careful so as not to bend any blades.
- Use only cleaning agents with a pH value between 7 and 9.
- Prevent dirt and dust from getting into adjacent parts of the system.
- Carefully remove dirt and dirty water.
- Dispose correctly of dirt and dirty water.

4.4.4 Replacing a filter element

Missing filter element

CAUTION!

Risk of injury due to a missing filter element!

If no filter element has been fitted in the AHU, dust and germs can get into the ventilation system and will be spread by the AHU. People may fall seriously ill as a consequence.

– Do not put the AHU into operation if no filter element has been fitted.
– Make sure that enough spare filter elements are readily available.

WARNING!

Risk of explosion from unsuitable filters!

For explosion-proof air handling units please note:

– Use only filters suitable for use in areas with potentially explosive atmospheres.
– No electrostatic charge must build up on filters; surface resistance <10^9 ohms.
– Ensure that the filter frame is made of a conductive material and that it is connected to the equipotential bonding.

Replacing a filter element with quick release fasteners

Personnel:

- Instructed person

Protective equipment:

- Safety harness
- Industrial safety helmet
- Safety shoes
- Protective gloves

1. Switch off the air handling unit and secure it against being switched on accidentally, *Chapter 1.7 'Securing the unit against being switched on accidentally' on page 13*.
2. Open the inspection access doors on the upstream side of the filter, .
3. Disconnect the ground cable of each filter element from the earth bar.

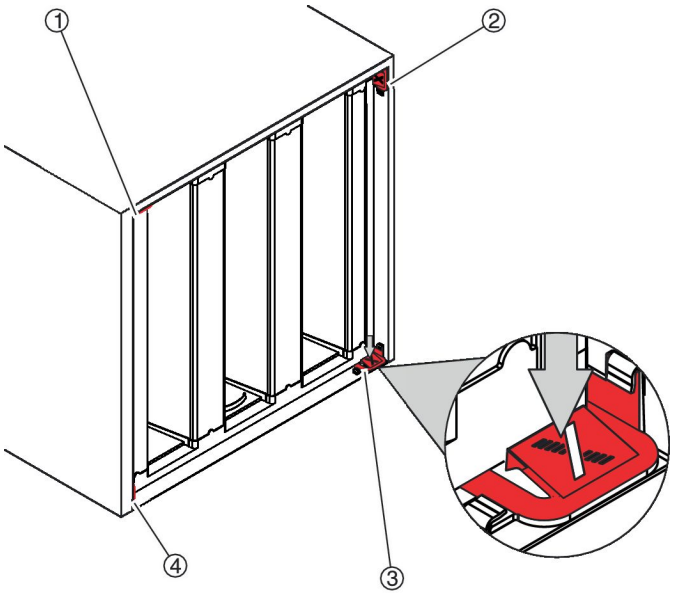

Fig. 20: Loosening the quick release fasteners

4. Press down the quick release fasteners (Fig. 20/1 to 4).

   ⇨ The filter element can now be removed.

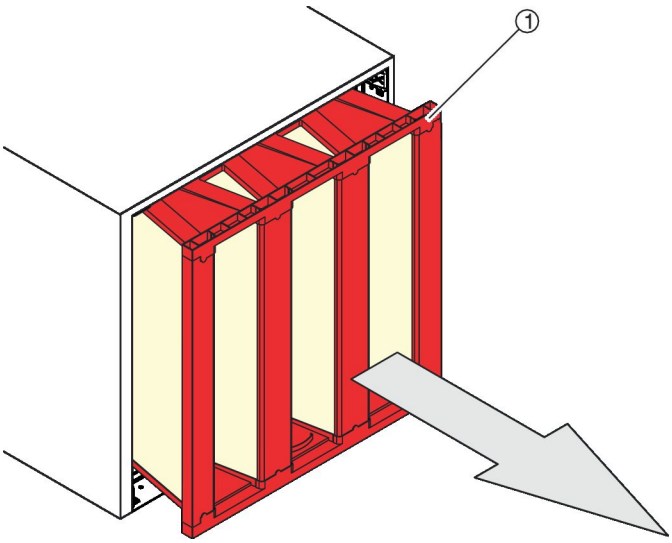

Fig. 21: Removing the filter element

5. ▸ Pull out the filter element (Fig. 21/1).

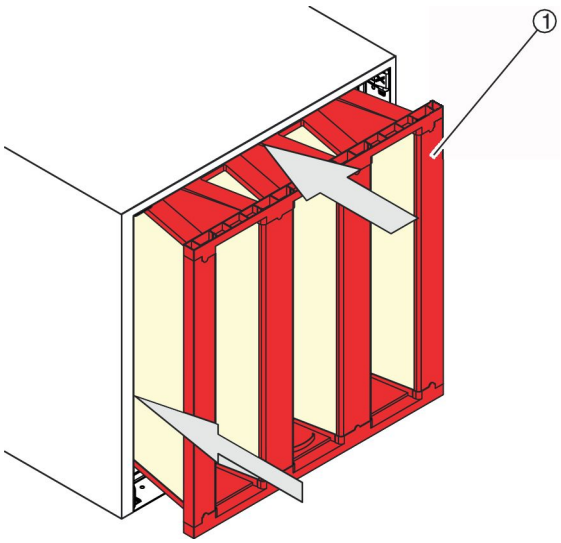

Fig. 22: Replacing the filter element

6. ▸ Insert a new filter element.

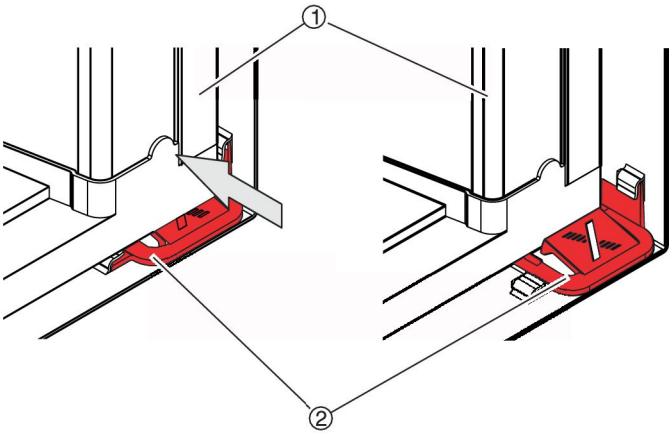

Fig. 23: Filter element locks in place

7. ▸ Push the new filter element (Fig. 23/1) in and over the quick release fasteners (Fig. 23/2) until it locks into place.

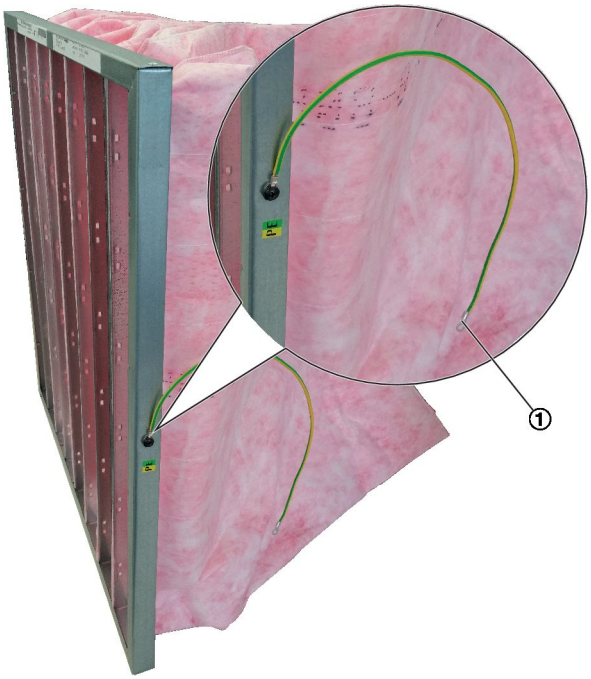

Fig. 24: Connecting the filter ground cable

8. ▸ Connect the ground cable of each filter element with the earth bar.

> **WARNING!**
>
> **Risk of explosion from incorrect filter installation!**
>
> When you assemble the individual filter pockets, connect the eye (Fig. 24/1) of the ground cable to the earth bar such that a conducting connection is established; secure the cable against coming loose.

9. ▸ Close the inspection access doors.

10. ▸ Carry out a zero point correction for the pressure monitor, linktarget [Filter Nullpunktaufnahme] doesn't exist but @y.link.required='true'.

11. ▸ Prepare unit restart, *'Before you start the AHU' on page 26*.

12. ▸ Remove the padlock from the mains isolator.

13. ▸ Restart the air handling unit, *'Switching the mains isolator on' on page 26*.

14. ▸ If software by others is used, enter the new filter element in that software or central BMS.

4.5 After maintenance

Personnel:

- Instructed person

1. Prepare unit restart, *'Before you start the AHU' on page 26*.
2. Remove the padlock from the mains isolator.
3. Restart the air handling unit, *'Switching the mains isolator on' on page 26*.

5 Faults

5.1 Safety notes regarding trouble-shooting

Incorrect troubleshooting

WARNING!

Risk of injury due to incorrect troubleshooting!

Incorrect troubleshooting can cause serious injuries and considerable damage to property.

- Before you start maintenance, switch off the air handling unit and secure it against being restarted accidentally.
- Refer to the list of possible faults to see who should or should not clear a fault.
- Before you start, make sure that there is sufficient clearance for the work you have to complete.
- Keep the work area tidy and clean. Parts and tools that are loosely stacked or left lying around are a source of accident.
- Before you recommission the unit, ensure the following:
  - All faults have been rectified according to this manual.
  - Nobody is inside the AHU.
  - All inspection access doors and covers have been closed.
  - All safeguards have been installed and function correctly.

Rotating parts of a fan

WARNING!

Risk of injury from rotating parts!

Rotating parts in the fan can cause severe injuries.

- Do not reach into the moving fan or tamper with it.
- Do not open any covers or inspection access panels while the unit is in operation.
- Make sure that the rotor is inaccessible while in operation.
- The fan does not stop immediately! Check that no parts are moving before you open an inspection access door.
- Switch off the system before you start working on movable fan parts and secure it against accidentally being switched on again. Wait until all parts have come to a standstill.

  Switch off the AHU before you start working on movable fan parts and secure it against accidentally being switched on again, *Chapter 1.7 'Securing the unit against being switched on accidentally' on page 13*. Wait until all parts have come to a standstill.

5.2 Faults displayed on the AHU

Differential pressure measuring devices

The differential pressure is indicated on the digital pressure measuring device that is attached to the AHU casing, *Chapter 2.5.3 'Differential pressure measuring device' on page 24*. If the differential pressure exceeds the maximum final differential pressure, this indicates a fault.

The maximum final differential pressure (ΔP_{max}) for a filter is given on a sticker on the inspection access door to the filter chamber.

5.3 List of faults

Fault description	Cause	Remedy	Personnel
The maximum differential pressure for the filter has been exceeded.	The filter element is contaminated.	In this order: ▪ Switch off the AHU (via the central BMS) and secure it against being switched on accidentally, *Chapter 1.7 'Securing the unit against being switched on accidentally' on page 13*. ▪ Replace the filter element, *Chapter 4.4.4 Replacing a filter element' on page 38*	Instructed person
The pressure of the heat transfer fluid in the systems provided by others is too high or too low.	Systems provided by others are not working properly.	In this order: ▪ Switch off the AHU (via the central BMS) and secure it against being switched on accidentally, *Chapter 1.7 'Securing the unit against being switched on accidentally' on page 13*. ▪ Rectify faults in the systems provided by others according to the system manufacturers' instructions.	Instructed person

5.4 Troubleshooting

Replacing a filter element

See: *Chapter 4.4.4 Replacing a filter element' on page 38*

5.5 After troubleshooting

Personnel:

- Instructed person

1. Prepare restart, *'Before you start the AHU' on page 26*.
2. Remove the padlock from the mains isolator.
3. Restart the air handling unit, *'Switching the mains isolator on' on page 26*.

6 Replacement parts

6.1 Safety notes regarding replacement parts

Explosion protection

WARNING!

Risk of explosion from the use of incorrect replacement parts!

Using incorrect or faulty replacement parts in areas with potentially explosive atmospheres may lead to an explosion. This can cause serious or even fatal injuries as well as considerable damage to property.

- Use only genuine replacement parts from the manufacturer or replacement parts that the manufacturer has approved.
- When in doubt, contact the manufacturer.

Failure to comply with these safety notes may lead to an explosion.

Void of warranty

Using non-approved replacement parts will void your product's warranty.

Buy replacement parts from an authorised supplier or from the manufacturer. For contact details see page 2.

WARNING!

Risk of injury from the incorrect installation of replacement parts!

Incorrect installation of replacement parts can lead to dangerous situations.

- Filter elements may be replaced by properly trained persons.
- All other replacement parts have to be installed by the TROX Technical Service, skilled qualified electricians or HVAC technicians.

6.2 Ordering replacement parts

One spare set of filter elements should always be available such that the air handling unit does not have to be switched off.

Replacement parts can be ordered from the TROX Technical Service, *'TROX Technical Service' on page 3*.

7 Accessories

Accessories

8 Disassembly and disposal

8.1 Safety notes regarding disassembly and disposal

WARNING!

Risk of explosion!

Ignition sources, such as sparks, open flames or hot surfaces, can lead to explosions in an area with potentially explosive atmospheres.

- Only specially trained personnel must carry out work in an area with potentially explosive atmospheres.
- Get written permission before you start working in an area with potentially explosive atmospheres.
- To remove the potentially explosive atmosphere, purge the air handling unit with fresh air before you open it.
- If you have to carry out work, either ensure that there is no potentially explosive atmosphere, or at least avoid any source of ignition. If you have to work in a zone with potentially explosive atmospheres, use only equipment that has been approved for use in that particular zone.
- If the AHU installation room has not been defined as an Ex zone, the system owner has to ensure sufficient ventilation in the installation room as otherwise normal leakage may result in an explosive atmosphere outside of the AHU (zonal dispersion).

Failure to comply with these safety notes may lead to an explosion.

Incorrect disassembly

DANGER!

Risk to life from incorrect assembly and disassembly!

Incorrect assembly or disassembly can result in risks to life and limb and in environmental hazards.

- Before you start disassembly, professionally disconnect all electrical cables.
  - Only a skilled qualified electrician must disconnect the power supply.
  - Ensure that no voltage is present.
- Before you start disassembly, correctly drain all operating fluids.
  - Disconnect operating fluid pipes and hoses.
  - Ensure that operating fluids are disposed of correctly.
- If you have any questions regarding disassembly, refer to the assembly instructions in this manual.

  Pay attention to the component manufacturers' documentation.
- Only trained specialist personnel must remove any components.
- If necessary, use additional personal protective equipment for outside installations, e.g. a safety harness.

Improper transport equipment

WARNING!

Risk to life from using improper transport equipment!

If packages are lifted without adequate transport equipment and if they are not properly secured, they may fall off and lead to fatal injuries.

- Move components only in the position in which they are to be installed.
- Stand clear of suspended loads.
- Do not move additional loads on top of a package.
- Use only the intended lashing points.
- Make sure that no weight is put on pipes, ducts or cables.
- Use only approved lifting gear and slings that are suitable and sufficient for the load to be moved.
- Do not tie ropes and chains or make knots or place them on sharp edges.
- Use lifting equipment only to lift packages or units, not to push or pull them.
- Ensure that ropes, belts and chains do not twist.
- Ensure that transport equipment has been correctly assembled, fastened and secured before you use it to lift anything.
- Secure all doors, dampers and panels.
- Move packages without any jerky movements and put them down when you leave your workplace.
- Transport slings are designed for single use only and not for permanent unit attachment.
- Transport tubes are designed for single use only and not for permanent unit attachment.

Unbalanced loads and centre of gravity

WARNING!

Risk of injury from falling or toppling loads!

Loads may be unbalanced, i.e. the centre of gravity may not be obvious. If the load is not properly attached to the lifting equipment, it may topple and fall. Falling or toppling loads can cause serious injuries.

- When you use a crane to move loads, ensure that the centre of gravity of the load is directly beneath the crane hook.
- Lift any load carefully and keep an eye on it to see whether it will stay in place. If required, change the lashing point(s).

Sharp edges, sharp corners and thin sheet metal parts

CAUTION!

Danger of injury from sharp edges, sharp corners and thin sheet metal parts!

Sharp edges, sharp corners and thin sheet metal parts of the heat exchanger or of the cooling or heating coil may cause cuts or grazes.

- Be careful when working on these components.
- Wear protective gloves, safety shoes and a hard hat.

ENVIRONMENT!

Risk of harm to the environment due to incorrect disposal of goods and packaging!

Incorrect disposal can harm the environment.

- Have electronic waste, electronic components and operating fluids (refrigerant, compressor oil, lubricants etc.) disposed of by an approved specialist disposal company.

8.2 Disassembly

Personnel:

- HVAC technician
- Skilled qualified electrician

Protective equipment:

- Industrial safety helmet
- Protective clothing
- Hearing protection
- Protective gloves
- Safety shoes

1. Disconnect electrical cables.

   Ensure that no voltage is present.
2. Remove all operating fluids.

   Properly dispose of all operating fluids.
3. Disconnect operating fluid pipes and hoses.
4. Open all module connectors and base frame connectors.
5. Remove the individual unit components.

   Use suitable transport equipment to move unit components away from the site.

8.3 Disposal

If no return or disposal agreement is in place, any disassembled components should be disposed of by an approved specialist disposal company.

Components that are no longer required should be recycled:

- Scrap the metals.
- Take plastic parts to be recycled.
- Dispose of other components and waste in a suitable manner, i.e. depending on their material properties.

Electrical and electronic components

Electrical and electronic components can contain materials and substances that are hazardous to health and the environment and which must not get into household and commercial waste.

As electrical and electronic components may also contain recyclables (e.g. precious metals), they must be provided for recycling or disposal by a specialist disposal company.

Chemicals

Chemicals (solvents, cleaning agents, operating fluids, etc.) affect the air, soil, water, and human health in various ways. In some cases, valuable substances can be extracted from them.

Chemicals must therefore not get into the air, soil, sewerage system, surface water or groundwater.

Commission an approved specialist disposal company to recover or dispose of chemicals.

Coolant, glycol

Coolants may contain substances that are toxic and pose a hazard to the environment. They must not be released into the environment. Commission a specialist disposal company to dispose of hazardous substances and materials.

Batteries

Battery components are toxic and pose a hazard to the environment. Batteries must not be disposed of with domestic waste. Batteries must only be disposed of by locally approved specialist companies.

Lubricants

Lubricants such as greases and oils contain toxic substances. They must not be released into the environment. Commission a specialist disposal company to dispose of hazardous substances and materials.

9 Technical data

9.1 Operating conditions

Data	Value	Unit
Ambient temperature – operation	-20...+40	°C
Temperature of the transported fluid (air, gas)	-10...+40	°C
Storage temperature	-40...+60	°C
Humidity, no condensation	0...45%	rh

WARNING!

Risk of explosion!

The maximum temperature range for the transported fluid must not be exceeded. If the temperature range can not be ensured, monitoring is required. If the temperature of the transported fluid exceeds the maximum temperature range, the AHU has to be switched off.

9.2 Technical data sheet

An illustration and the technical data should already have been provided to you for information and acceptance. We recommend that you keep those documents with this manual.

9.3 Rating plate

You will find the rating plate on the operating side of the AHU. In addition, AHU casing units carry stickers with technical data for the respective component, e.g. for a fan.

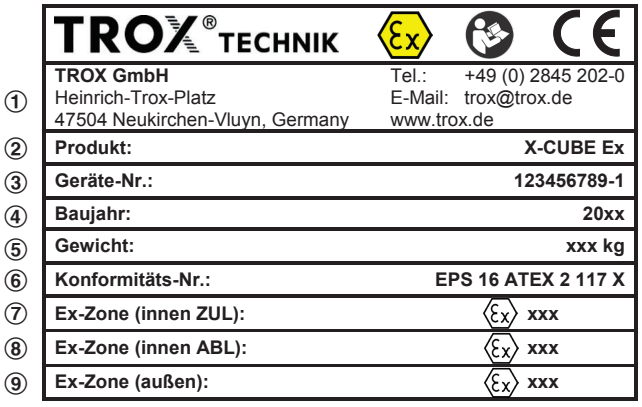

Fig. 25: Rating plate (rating plate for supply air and extract air combination shown)

① Manufacturer
② Type of product
③ Unit ID
④ Year of manufacture
⑤ Weight
⑥ Conformity number
⑦ Area of application, Ex zone inside, supply air
⑧ Area of application, Ex zone inside, extract air
⑨ Area of application, Ex zone outside

9.4 CE declaration of conformity

The EU declaration of incorporation or the EU declaration of conformity for the air handling unit should have been provided together with the technical data sheets.

We recommend that you keep those documents with this manual.

Important notes:

- In compliance with Directive 2009/125/EC the unit has to be fitted with a suitable speed control, unless a speed control is already part of the supply package.
- The CE mark on the air handling unit is of no relevance with regard to 2006/42/EC, Machinery Directive; according to the Machinery Directive, an air handling unit without integral controls is considered partly completed machinery.
- The partly completed machinery must not be put into service until the final machinery into which it is to be incorporated has been declared to be in conformity with the provisions of Directive 2006/42/EC, where appropriate.

10 Glossary

Components (to 2014/34/EU)

Any item essential to the safe functioning of equipment and protective systems but with no autonomous function.

Equipment (to 2014/34/EU)

Machines, apparatus, fixed or mobile devices, control components and instrumentation thereof and detection or prevention systems which, separately or jointly, are intended for the generation, transfer, storage, measurement, control and conversion of energy and/or the processing of material and which are capable of causing an explosion through their own potential sources of ignition.

Exhaust air – EHA

Air that flows from an internal space to the outside.

Explosive atmosphere (to 2014/34/EU)

A mixture with air, under atmospheric conditions, of flammable substances in the form of gases, vapours, mists or dusts in which, after ignition has occurred, combustion spreads to the entire unburned mixture. May also be called 'zone with potentially explosive atmospheres' in this manual.

Extract air – ETA

Air that flows out of a conditioned room.

HVAC technician

HVAC technicians are individuals who have sufficient professional or technical training in the field they are working in to enable them to carry out their assigned duties at the level of responsibility allocated to them and in compliance with the relevant guidelines, safety regulations and instructions. HVAC technicians are individuals who have in-depth knowledge and skills related to HVAC systems; they are also responsible for the professional completion of the work under consideration.

Indoor air – IDA

Air in a conditioned internal space.

ODA – Outdoor air

Untreated air that flows through an inlet into the air handling unit or a building.

Potentially explosive atmosphere (to 2014/34/EU)

An atmosphere which could become explosive due to local and operational conditions. May also be called 'area with potentially explosive atmospheres' in this manual.

Recirculated air – RCA

Extract air that is reconditioned in the air handling unit and supplied to an internal space again.

Secondary air – SEC

Air that is conditioned and then supplied to the same room from which it was extracted.

Skilled qualified electrician

Skilled qualified electricians are individuals who have sufficient professional or technical training, knowledge and actual experience to enable them to work on electrical systems, understand any potential hazards related to the work under consideration, and recognise and avoid any risks involved.

Skilled qualified refrigeration technicians

Skilled qualified refrigeration technicians have been trained in the field of refrigeration engineering, and they know the relevant standards and guidelines. Evidence of the relevant experience claimed must be available. Skilled qualified refrigeration technicians are individuals who have sufficient professional or technical training, knowledge and actual experience to enable them to work on refrigeration systems, understand any potential hazards related to the work under consideration, and recognise and avoid any risks involved.

Supply air – SUP

Air that is supplied to a conditioned internal space; it is also conditioned air that enters an air handling unit.

Transfer air – TRA

Air that flows from one conditioned internal space to another conditioned internal space.

Zone (1999/92/EC, Annex I)

Hazardous places are classified in terms of zones on the basis of the frequency and duration of the occurrence of an explosive atmosphere. May also be called 'zone with potentially explosive atmospheres' in this manual.

11 Index

Appendix

A Supplier documents

A.1 Ziehl-Abegg RH..C / ER..C fan

Name	Data
Designation	Fans
Type	RH..C / ER..C
Number	
Type of manual	Installation manual
Manufacturer	Ziehl-Abegg

Montageanleitung

Freilaufende Radiallaufräder / Einbauventilatoren

direktgetrieben, mit IEC-Normmotor der Schutzart druckfeste Kapselung Ex de IIC T4 Gb oder Ex d IIC T4 Gb für die Förderung von explosionsfähiger Atmosphäre der Zone 1 Kategorie 2G und Zone 2 Kategorie 3G.

Inhaltsübersicht

VENTILATOR-Typenschild einkleben!

Anwendung

RH..C

- ZIEHL-ABEGG - Freilaufende Radiallaufräder der Baureihe **RH..C**, in den lieferbaren Baugrößen **250 bis 1000**, sowie die Gerätebaureihe **ER..C** (Typenbezeichnung siehe Typenschild) in explosionsgeschützter Ausführung **Ex II 2G c IIB T4 mit IEC-Normmotor der Zündschutzart Ex de IIC T4 Gb oder Ex d IIC T4 Gb**sind keine gebrauchsfertigen Produkte, sondern als Komponenten für Klima-, Be- und Entlüftungsanlagen konzipiert. Sie dürfen erst betrieben werden, wenn sie ihrer Bestimmung entsprechend eingebaut sind und die Sicherheit durch Schutzeinrichtungen nach DIN EN ISO 13857 / EN 60529 und die nach EN 14986 erforderlichen baulichen Explosionsschutzmaßnahmen sichergestellt ist.
- Der Anlagenbauer ist für die Abdichtung der Anlage verantwortlich.
- Die Ventilatoren erfüllen hinsichtlich der Werkstoffwahl durch besondere Schutzmaßnahmen im Bereich möglicher Berührungsflächen zwischen rotierenden und stehenden Bauteilen (Lüfterraddeckscheibe / Einströmdüse) die Anforderungen der Norm EN14986. Für das rotierende Teil (Lüfterraddeckscheibe) wird als Werkstoff „Stahl beschichtet“ eingesetzt. Für die Auswahl des Werkstoffs der feststehenden Peripherieteile ist, bei Bezug des Lüfterrades ohne ZIEHL-ABEGG-Einströmdüse, der Anlagenbauer verant-

Assembly instructions

Centrifugal impeller without scroll / Plenum Fans

direct driven, with IEC standard motor, protection class pressure-proof housing Ex de IIC T4 Gb or Ex d IIC T4 Gb for the conveyance of zone 1 category 2G and zone 2 category 3G explosive atmospheres.

Contents

Application

ER..C

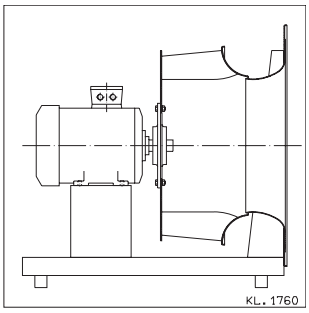

- *ZIEHL-ABEGG - Series **RH..C** free running centrifugal impeller, available in frame sizes **250 to 1000**, and the device series **ER..C** (Type designation see rating plate) in explosion-proof version **Ex II 2G c IIB T4 with IEC standard motor protection type Ex de IIC T4 Gb or Ex d IIC T4 Gb** are not ready-for-use products, but are designed as components for air-conditioning and ventilation plants. They may only then be operated when they are installed in accordance with their intended use and safety has been ensured through protective devices in accordance with DIN EN ISO 13857 / EN 60529 and the required structural explosion-protective measures in accordance with the EN 14986.*
- *The system constructor is responsible for the sealing of the system.*
- *Regarding the choice of materials, the fans fulfill the requirements of the EN14986 standard through special protective measures in the area of possible accidental contact between the rotating and stationary component parts (impeller). „Coated steel“ is used as the material for the rotating part (impeller shroud). The system constructor is responsible for the selection of the material for the stationary periphery parts when the impeller is purchased*

wortlich. Es dürfen nur Werkstoffpaarungen nach EN 14986 eingesetzt werden.

Sicherheitshinweise

- Die Laufräder sind nur zur Förderung von Luft oder explosionsfähiger Atmosphäre der Zone 1 Kategorie 2G und Zone 2 Kategorie 3G bestimmt. Die Förderung von Feststoffen oder Feststoffanteilen im Fördermedium ist nicht zulässig.
- Betreiben Sie den Ventilator nur nach seiner bestimmungsgemäßen Verwendung und nur bis zur **max. zulässigen Betriebsdrehzahl** gemäß Angaben auf dem Ventilator-/Laufrad-Typenschild. Ein Überschreiten der max. zul. Betriebsdrehzahl führt als Folge der hohen kinetischen Energie (Masse x Drehzahl) zu einer Gefährdungssituation. **Das Laufrad kann bersten - Lebensgefahr!** Die max. zulässigen Betriebsdaten auf dem Typenschild gelten für eine Luftdichte $\rho = 1{,}2\ kg/m^3$.
- Freilaufende Laufräder sowie die Gerätebaureihe **ER...** dürfen mit Frequenzumrichter nur dann betrieben werden, wenn ein Antriebsmotor der Zündschutzart **„Druckfeste Kapselung Ex de IIC oder Ex d IIC“** verwendet wird.
- Die Angabe der Temperaturklasse auf dem EX-Prüfschild (Motor) muss mit der Temperaturklasse des möglicherweise auftretenden brennbaren Gases übereinstimmen.
- Montage und elektrische Installation darf nur durch geeignetes Fachpersonal, das die **einschlägigen Vorschriften** beachtet, vorgenommen werden!
- Jedem Motor muss ein Motorschutzschalter vorgeschaltet sein. Beachten Sie hierzu die Angaben des Motorherstellers.
- Wicklungsüberwachung durch Kaltleiter für Abschaltung am Umrichter. Zur Schutzeinrichtung wird ein Auslösegerät mit Kennzeichen II (2) G benötigt.
- Bei Drehzahlsteuerung durch Frequenzumrichter ist sicherzustellen, dass die max. zul. Drehzahl nicht durch eine Fehlfunktion des Frequenzumrichters überschritten wird.
- Bei Betrieb mit Frequenzumrichter ist eine Übermodulation nicht zulässig. Lüfterrad kann bersten - **Lebensgefahr!**
- Bezüglich Drehzahlregelung mit Frequenzumrichter sind die Sicherheitshinweise und Empfehlungen gemäß der Betriebsanleitung des Motorherstellers einzuhalten. Dies gilt auch in Bezug auf Motoreinbau, elektrischen Anschluss und Wartung.
- Beachten Sie die Einbau- und Sicherheitshinweise zu den verschiedenen Ventilatorbauformen. Nichtbeachtung oder Missbrauch kann zu körperlichen Schäden oder Beschädigung des Ventilators und zur Explosion einer zündfähigen Gas-Luftatmosphäre führen - **Lebensgefahr**.
- Beachten Sie die Hinweise in der Betriebsanleitung des Motorherstellers, die Bestandteil des Lieferumfangs ist.
- Wird der Ventilator frei ansaugend oder frei ausblasend eingesetzt, ist zu prüfen, ob die Sicherheitsabstände gemäß **DIN EN ISO 13857 / EN 60529** eingehalten werden.
- Die Einhaltung der Norm DIN EN ISO 13857 / EN 60529 bezieht sich nur auf den montierten Berührschutz, sofern dieser zum Lieferumfang gehört.
- Achten Sie insbesondere saugseitig auf ausreichend bemessenen Sicherheitsabstand, da durch die Sogwirkung des Ventilators Kleidung, Gliedmaßen oder bei größeren Ventilatoren auch Personen angesaugt werden können.
- Wenn durch die Geräte- oder Anlagenkonstruktion das Ansaugen oder Hereinfallen größerer Teile in den Laufradbereich nicht ausgeschlossen werden kann **- Gefahr der Explosion einer zündfähigen Gas-Luftatmosphäre -** ist saugseitig ein Schutzgitter zwingend erforderlich.
- Blockieren oder Abbremsen des Ventilators durch z. B. Hineinstecken von Gegenständen ist untersagt. Dies führt zu heißen Oberflächen und Beschädigungen am Laufrad.
- Ein Restrisiko durch Fehlverhalten, Fehlfunktion oder Einwirken höherer Gewalt beim Betreiben des Laufrades kann nicht völlig ausgeschlossen werden. Der Planer oder Erbauer der Anlage muss durch geeignete Sicherheitsmaßnahmen nach DIN EN ISO 13857 / EN 60529, z. B. Schutzeinrichtungen, verhindern, dass eine Gefährdungssituation entstehen kann.
- Diese Montageanleitung ist Teil des Produktes und als solche zugänglich aufzubewahren.

without ZIEHL-ABEGG inlet rings. Only mating materials in accordance with the EN14986 may be utilized.

00282064

Safety instructions

- *The impellers are only intended for the conveyance of air or zone 1 category 2G and zone 2 category 3G explosive atmospheres. The conveyance of solid matter or solids content in the conveyance medium handled is not permitted.*
- *Only operate the fan according to the intended application, and only up to the **maximum permissible speed** given in the information on the fan/impeller rating plate. Exceeding the maximum permissible speed leads, as a result of the high kinetic energy (mass x rotation rate), to a hazardous situation. **The impeller can burst - lethal hazard!** The maximum permissible operating data given on the rating plate is valid at an air density $\rho = 1.2\ kg/m^3$.*
- *Impellers without housing/plug fans as well as the **ER...** device series may only then be operated with a frequency converter if a drive motor of the **"Ex de IIC or Ex d IIC pressure-proof housing"** ignition protection type is utilized.*
- *The data concerning the temperature class on the EX-rating plate (motor) must coincide with the temperature class of any possibly occurring combustible gasses.*
- *Mounting and electrical installation may only be carried out by trained specialized personnel who observe the **relevant regulations**!*
- *A protective motor switch must be connected before each motor. Please comply with the motor manufacturer's instructions.*
- *Winding monitoring through PTC thermistors for disconnection at the converter. A triggering device with the II (2) G mark is needed as a safeguard.*
- *In case of speed control through a frequency converter, it must be ensured that the max. permissible speed cannot be exceeded due to any frequency converter malfunction.*
- *When in operation with a frequency converter, no overmodulation is allowed. The fan wheel may burst – **danger to life!***
- *With regard to speed regulation with frequency converters, the safety instructions and recommendations are to be maintained in accordance with the motor manufacturer's operating instructions. This also applies to motor installation, electrical connections, and servicing.*
- *Observe the installation and safety instructions applicable to the various fan designs. Non-observance or misuse can lead to bodily harm or damage to the fan and to the explosion of ignitable gas-air mixtures - **Danger of death**.*
- *Observe the notes in the motor manufacturer's operating instructions, which form part of the supply.*
- *If a fan is utilized as a free inlet or free discharge type, verify that the required clearance based on **DIN EN ISO 13857 / EN 60529** is maintained.*
- *The maintenance of the standard DIN EN ISO 13857 / EN 60529 relates only to the installed accidental contact protection, provided that it is part of the scope of delivery.*
- *Pay special attention that there is sufficiently dimensioned safety clearance on the inlet side, as clothes, limbs, or, in the case of large fans, even people can be sucked in due to the fan's suction power.*
- *If, due to the device or the system design, it cannot be excluded that large parts could be sucked into or fall into the impeller area **- danger of explosion of an ignitable gas-air atmosphere -** a suction-side guard grille is absolutely required.*
- *Blocking or braking the fan by, say, pushing objects into it is forbidden. This leads to heated surfaces and damage to the impeller.*
- *Residual risk due to inappropriate behavior, malfunction, or influence through acts of God during operation of the impeller cannot be completely excluded. The system planner or constructor must prevent the emergence of a hazardous situation through suitable safety measures in accordance with DIN EN ISO 13857 / EN 60529, e.g., through protective devices.*
- *These assembly instructions are part of the product and, as such, are to be kept accessible at all times.*

Transport, Lagerung

Bei der Handhabung Sicherheitsschuhe und Schutzhandschuhe benutzen!

- Radiallaufräder oder Einbauventilatoren ER..C werden in der Regel auf Europaletten geliefert und können mittels Hubwagen transportiert werden.
- Bei Transport mit Hebezeugen:
  - **Bauform RH..C ohne Motor:** Hebeband mit ausreichender Traglast um eine Laufradschaufel herumlegen. Beachten Sie die Gewichtsangabe auf dem Typenschild (Rückseite der Laufradbodenscheibe). Verwenden Sie nur ein Hebeband, das geeignet ist, scharfkantige Lasten zu tragen.
  - **Bauform ER..C:** Ventilatoreinheit darf nur mit geeignetem Hebezeug (Lasttraverse) angehoben und transportiert werden. Auf ausreichende Seil- bzw. Kettenlänge ist zu achten.
  - **Achtung: Anordnung der Lasttraverse quer zur Motorachse. Auf ausreichende Breite der Lasttraverse achten. Kette bzw. Seil darf das Lüfterrad beim Anheben nicht berühren! Stellen Sie sich auf keinen Fall unter den schwebenden Ventilator, da im Falle eines Defektes am Transportmittel Lebensgefahr besteht. Beachten Sie unbedingt immer die Gewichtsangaben auf dem Ventilator-Typenschild und die zul. Traglasten des Transportmittels.**
- Vermeiden Sie Schläge und Stöße, besonders bei auf Geräten aufgebauten Ventilatoren.
- Bei Beschädigungen umgehend den Spediteur benachrichtigen.
- Lagern Sie den Ventilator in trockener, staub- und schwingungsfreier Umgebung.
- Vermeiden Sie zu lange Lagerzeiträume. Beachten Sie hierzu die Hinweise des Motorherstellers.

Transport, storage

Wear safety shoes and gloves for handling!

- *Centrifugal impellers and ER..C plug fans are generally delivered on Euro palettes and can be transported using lift trucks.*
- *When transporting using hoists/cranes:*
  - ***RH..C design without motor:*** *Wrap an impeller blade using a sling band with a sufficient amount of ultimate load. Observe the weight data on the identification plate (back of the impeller base plate). Use only sling bands that are suitable for carrying sharp-edged loads.*
  - ***ER..C design:*** *Fan unit may only be lifted and transported using a suitable hoisting device (load spreader). Ensure there is sufficient cable or chain length.*
  - ***Caution: Arrange the lifting beam transverse to the motor axis. Ensure that the lifting beam is sufficiently wide. Chain or cable must not touch the fan impeller during lifting! Never stand under the swinging fan, since life can be at risk in the event of a defect in the transporter. Make sure that the weight information on the fan rating plate and the permissible loads of the transporter are always observed.***
- *Avoid impacts and collisions, especially on fans set-up on devices.*
- *In the event of damage inform the carrying agent immediately.*
- *Store the fan in a dry, dust- and vibration-free environment.*
- *Avoid excessive storage times. Please refer to the manufacturer's motor information on this.*

Laufradeinbau

- **Laufräder mit Festnabe**
  - Das Laufrad wird mittels Festnabe mit dem Wellenende des Antriebsmotors verbunden.
  - Montage: Alle blanken Oberflächen (Wellenende, Nabenbohrung) leicht befetten. Laufrad mit Nabe (1) bis auf Wellenschulter (2) aufziehen (Übergangspassung). Bei entsprechendem Gewicht mit Hebezeug sichern. Axiale Wellensicherung mittels Schraube (3) und Scheibe (4) vorsehen. Anzugsmomente nach Tabelle einhalten. Die Schraube (3) ist mit einer Sicherungsscheibe (z. B. Sperrkant- oder Kontaktscheibe) zu sichern. Bei Motoren ab BG132 (WellenØ 38) ist nach Norm EN 14986 eine Sonderscheibe mit Schrauben (5) zur zusätzlichen Sicherung angebracht. Anzugsmomente nach Tabelle einhalten.
  - Demontage: Axiale Schraubensicherung lösen und Laufrad mit Nabe mittels geeigneter Abziehvorrichtung abziehen (bei entsprechendem Gewicht mit Hebezeug sichern). Bei Motoren ab BG132 muss die zusätzliche axiale Wellensicherung (5) ebenfalls gelöst werden.

Installing the impeller

- ***Impellers with fixed hub***
  - *The impeller is connected to the shaft end of the drive motor using a fixed hub.*
  - *Installation: Lightly lubricate all bare surfaces (shaft ends, hub holes). Pull the impeller with the hub (1) up to the shaft shoulder (5) (transitional fit). Secure with the hoisting device with corresponding weight. Secure the axial shaft-locking device using the screw (3) and washer (4). Maintain the torque in accordance with the table. The screw (3) is to be secured using a locking washer (e.g. square taper washer or contact washer). For motors starting from BG132 (shaft Ø 38), a special washer with screws (5) is to be attached as an additional safeguard in accordance with EN 14986 standard. Maintain the torque in accordance with the table.*
  - *Disassembly: Release the axial screw connection and pull off the impeller with the hub using a suitable pulling unit (secure with hoisting device at the corresponding weight). For motors starting from BG132, the additional axial shaft-locking device (5) must be released also.*

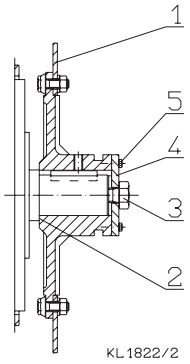

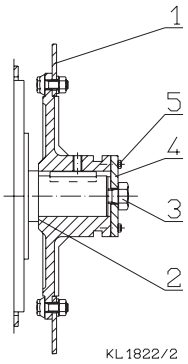

FK 8.8	M4	M5	M6	M8	M10	M12
MA	2,8 Nm	5,5 Nm	9,5 Nm	23 Nm	46 Nm	79 Nm

- Bei Einhaltung der Werkstoffpaarung müssen folgende Mindestspalte eingehalten werden: zwischen rotierenden und stehenden Teilen (Laufraddeckscheibe / Einströmdüse bzw. Druckentnahmenippel) darf der Mindestspalt (s) nicht

SC 8.8	*M4*	*M5*	*M6*	*M8*	*M10*	*M12*
MA	*2,8 Nm*	*5,5 Nm*	*9.5 Nm*	*23 Nm*	*46 Nm*	*79 Nm*

- *The following minimum gap must be maintained during compliance of materials mating: between the rotating and stationary parts (impeller shroud / inlet ring or pressure release nipple), the minimum gap (s) must not be smaller*

kleiner als 1 % des maßgeblichen Kontaktdurchmessers, aber nicht weniger als 2 mm betragen.

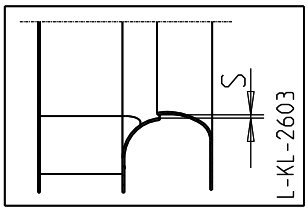

- Vor- bzw. nachgeschaltete Bauteile oder solche, die unmittelbar im Luftstrom liegen, dürfen keine ungeschützten Aluminium- oder Stahloberflächen aufweisen. Erforderlich ist eine Lackierung oder Kunststoffbeschichtung, welche mindestens Gitterschnitt-Kennwert 2 nach DIN EN ISO 2409 erfüllt. Der Oberflächenschutz soll verhindern, dass es zur Bildung von Rost oder Ablagerung von Eisenoxyd oder kleineren Rostpartikeln kommt, welche in Verbindung mit Aluminium und dem Auftreffen von Partikeln mit hoher Luftgeschwindigkeit zu einer chemischen Reaktion (aluminiotherm. Reaktion) und somit zur Zündung einer explosionsfähigen Gas-Luftatmosphäre führt.

Elektrischer Anschluss

- Darf nur von technisch ausgebildetem Fachpersonal (DIN EN 50 110, IEC 364) vorgenommen werden.
- Nur Kabel verwenden, die eine dauerhafte Dichtigkeit in Kabelverschraubungen gewährleisten (druckfest-formstabiler, zentrisch-runder Mantel; z. B. mittels Zwickelfüllung)!
- Der Ventilator darf nur an Stromkreise angeschlossen werden, die mit einem allpolig trennenden Schalter abschaltbar sind.
- Beachten Sie unbedingt die Sicherheits- und Inbetriebnahmehinweise des Motorherstellers, sowie die im Motor-Klemmenkasten befindlichen Schaltbilder.
- Vor dem elektrischen Anschluss des Motors die Anschlussdaten mit den Angaben auf dem Motortypenschild vergleichen.

Geräteaufstellung

Bei der Handhabung Sicherheitsschuhe und Schutzhandschuhe benutzen!

- Sicherheitshinweise beachten!
- Um die Übertragung störender Schwingungen zu vermeiden, wird eine Körperschallentkopplung des kompletten Einbauventilators empfohlen. (Feder- bzw. Dämpfungselemente sind nicht Bestandteil des serienmäßigen Lieferumfangs). Die Zuordnung der Abstandmaße der Federdämpfer, je nachdem, ob der Ventilator mit oder ohne Zubehör ausgestattet ist, kann unserer Homepage unter www.ziehl-abegg.de im Bereich Download - Luft- und Regeltechnik entnommen werden.
- **Achtung: Alle Auflagepunkte müssen betriebssicher mit dem Fundament verbunden sein. Bei nicht ausreichender Befestigung besteht Gefahr durch Kippen des Ventilators.**
- Auf ausreichende saug- und druckseitige Abstände achten.
- Aufstellung im Freien nur, wenn in den Bestellunterlagen ausdrücklich vermerkt und bestätigt. Bei längeren Stillstandszeiten in feuchter Umgebung besteht die Gefahr von Lagerschäden. Korrosion durch entsprechende Schutzmaßnahmen vermeiden. Eine Überdachung ist erforderlich.
- Eigenmächtige Veränderungen/Umbauten am Ventilator sind nicht zulässig - Sicherheitsrisiko.
- Werden Gefährdungen durch Blitzschlag festgestellt, müssen die Anlagen durch geeignete Blitzschutzmaßnahmen geschützt werden.
- Anlagen müssen in ausreichendem Sicherheitsabstand zu Sendeanlagen oder durch geeignete Abschirmung geschützt werden.
- ER-Ventilatoren dürfen nur in Einbaulage H (Ventilator stehend, Motorwelle horizontal) betrieben werden!
- Das Demontieren bzw. das Anbringen von Bauteilen am Ventilator bzw. Laufrad führt zum Erlöschen der Garantieleistung! Ausnahme: Der Klemmkastendeckel darf zum Auflegen der Anschlusskabel von technisch ausgebildetem Fachpersonal (DIN EN 50110, IEC 364) geöffnet werden.

than 1 % of the relevant contact diameter, but must not be less than 2 mm.

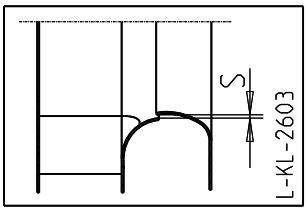

- *Up and downstream components or those that lie directly in the airflow must not have any unprotected aluminum or steel surfaces. A paint finish or plastic coating that at least fulfills the crosscut test parameter 2 in accordance with DIN EN ISO 2409 is required. The surface protection is to prevent the formation of rust or sedimentary deposition of red oxide or small rust particles, which in connection with aluminum and the emergence of particles with high airflow velocity lead to a chemical reaction (aluminiothermal reaction) and thus to ignition of an explosive gas-air atmosphere.*

Electrical connection

- *May only be undertaken by technically trained personnel (DIN EN 50 110, IEC 364).*
- *Only use lines which can guarantee a permanent seal around the cable glands (pressure-resistant, dimensionally-stable, round-centred jacket; e.g. by means of gusset filling)!*
- *Connect fan only to electrical circuits that can be disconnected with an all-pole isolating switch.*
- *Ensure that attention is paid to the motor manufacturer's safety and commissioning information and the circuit diagrams in the motor terminal box.*
- *Before making the electrical motor connections, compare the connection specifications with the specifications on the motor identification plate.*

Setting up the unit

Wear safety shoes and gloves for handling!

- *Observe the safety information!*
- *In order to avoid transmitting disturbing vibrations, it is recommended that a means of decoupling the structure borne noise of the complete built-in fan should be used. (Spring or attenuation components are not part of the standard supply). The allocation of the distance between the spring suspensions, depending on whether the fan is fitted with accessories or not, can be found on our homepage at www.ziehl-abegg.de in the Download section - Ventilation and Control Technology.*
- ***Caution: All contact points must be fixed securely to the base. If the fixing is inadequate there is a risk of the fan overturning.***
- *Ensure adequate clearance on suction and pressure sides.*
- *Erect in the open air only if this is expressly mentioned and confirmed in the ordering information. There is a risk of damage to the bearings if the fan remains stopped in a moist environment. Avoid corrosion by suitable protective measures. Roofing is required.*
- *Modifications/conversions to the fan undertaken by the operator are not permissible - safety hazard.*
- *If hazards from lightning strikes have been ascertained, the system must be protected through the use of suitable lightning protection measures.*
- *Systems must be sufficiently separated from transmitting installations or be protected through suitable shielding.*
- *ER fans may only be operated in installation position H (fan upright, motor shaft horizontal)!*
- *Dismantling and attaching components to the fan or impeller results in expiration of the warranty! Exception: the terminal-box cover may be opened so that technically trained qualified-persons (DIN EN 50110, IEC 364) can attach the connection cable. Suitable threaded cable-connections may be attached to the terminal box.*

Accessories:

- *Guard grills, spring suspensions, and fabric expansion joints can be ordered as accessories. During the installation*

Am Klemmkasten dürfen geeignete Kabelverschraubungen angebracht werden.

Zubehör:

- Als Zubehör können Schutzgitter, Federdämpfer und Gewebekompensatoren bezogen werden. Beim Einbau bzw. Anbau dieser Elemente ist der Anlagebauer dafür verantwortlich die Zubehörteile zu erden.

Betriebsbedingungen

- Beachten Sie die Angaben des Motorherstellers.
- Ein Überschreiten der max. zul. Betriebsdrehzahl (Ventilator-/Laufrad-Typenschild) ist nicht zulässig, siehe Sicherheitshinweise. Die max. zulässige Betriebsdrehzahl gilt für Dauerbetrieb S1. Hohe Schalthäufigkeit ist zu vermeiden. Anlauf über Y/D-Schaltung. Ventilator nicht im Resonanzbereich des Laufrades betreiben - Gefahr durch Dauerbruch.
- Bei Betrieb mit Frequenzumrichter ist eine Übermodulation nicht zulässig. Lüfterrad kann bersten - **Lebensgefahr!**
- A-bewerteter Schallleistungspegel größer 80dB(A) möglich, siehe Produktkatalog.

Inbetriebnahme

- Vor Erstinbetriebnahme prüfen:
  - Hinweise des Motorherstellers zur Inbetriebnahme berücksichtigt?
  - Ist der Motorschutz richtig eingestellt? Polumschaltbare Motoren benötigen für jede Polzahl einen eigenen Schalter. Bei Dreieck-Schaltung muss ein Überlastschutz mit Phasenausfallschutz vorgesehen werden.
  - Einbau und elektrische Installation fachgerecht abgeschlossen?
  - Eventuell vorhandene Montagerückstände und Fremdkörper aus dem Laufrad- und Ansaugbereich entfernt?
- Der Ventilator ist nach dem Einbau auf mechanische Schwingungen zu überprüfen. Ist die Schwingstärke des Ventilators größer als 2,8 mm/s (gemessen am Lagerschild des laufradseitigen Motorlagers), muss das Laufrad von Fachpersonal überprüft und gegebenenfalls nachgewuchtet werden.
- Inbetriebnahme darf erst erfolgen, wenn alle Sicherheitshinweise überprüft und eine Gefährdung ausgeschlossen ist.
  - Stromaufnahme prüfen! **Ist die Stromaufnahme höher als auf dem Motor-Leistungsschild angegeben, ist der Ventilator sofort außer Betrieb zu setzen.**
  - Drehrichtung kontrollieren (Drehrichtungspfeil auf Laufradbodenscheibe bzw. am Ventilatorgehäuse)
  - Auf ruhigen, schwingungsarmen Lauf achten.

Instandhaltung und Wartung

- Der Anlagenbauer muss eine leichte Zugänglichkeit für Reinigungs- und Inspektionsarbeiten ermöglichen.
- **Bei der Handhabung Sicherheitsschuhe und Schutzhandschuhe benutzen!**
- Überprüfung des Ventilators auf mechanische Schwingungen gemäß ISO 14694. Empfehlung: alle 6 Monate. Die max. zul. Schwingstärke beträgt 2,8 mm/s (gemessen am Lagerschild des laufradseitigen Motorlagers, oder gem. den speziellen Vereinbarungen mit dem Kunden).
- Je nach Einsatzbereich und Fördermedium unterliegen Laufrad und Gehäuse einem natürlichem Verschleiß. Ablagerungen am Laufrad können zur Unwucht und damit zu Schäden (Gefahr eines Dauerbruchs) führen.
  - Laufrad kann bersten - Lebensgefahr!
  - Beachten Sie die Angaben des Motorherstellers zur Instandhaltung und Wartung.
- Instandsetzungsarbeiten nur durch ausgebildetes Fachpersonal vornehmen lassen.
- **Bei allen Instandsetzungs- und Wartungsarbeiten:**
  - Sicherheits- und Arbeitsvorschriften (DIN EN 50 110, IEC 364) beachten.
  - Ventilatorlaufrad steht still!
  - Stromkreis unterbrochen und gegen Wiedereinschalten gesichert.
  - Bei Betrieb über Frequenzumrichter Wartezeit nach dem Freischalten beachten - siehe Betriebsanleitung des Herstellers bezüglich Entladungszeit der Kondensatoren.
  - Spannungsfreiheit feststellen.
  - Keine Wartungsarbeiten am laufenden Ventilator!

or addition of these elements, the system constructor is responsible for grounding the accessory components.

Operating conditions

- *Observe the motor manufacturer's instructions.*
- *Exceeding the max. permissible operating speed (fan / impeller rating plate) is not permissible; see safety instructions. The max. permissible operating speed applies to continuous operation S1. High switching frequencies are to be avoided. Start-up via Y/D connection. Do not operate the fan in the resonance range of the impeller - danger through fatigue fracture.*
- *When in operation with a frequency converter, no overmodulation is allowed. The fan wheel may burst – **danger to life!***
- *A-rated sound power levels of over 80 dB(A) are possible, see product catalogue.*

Start-up

- *Before first-time start-up, check the following:*
  - *Account has been taken of the motor manufacturer's information?*
  - *Ensure that the motor protection is correctly set? Pole-changing motors need a separate switch for each number of poles. An excess-current switch with phase monitor must be provided for delta connections.*
  - *Installation and electrical connection have been properly completed?*
  - *All leftover installation materials and other foreign materials have been removed from the fan cavity.*
- *After installation, check the fan for mechanical oscillations. If the amount of fan oscillation is larger than 2.8 mm/s, (measured on the end plate of the impeller side of the motor bearing), the impeller must be examined by specialists and, if necessary, rebalanced.*
- *Commissioning may only take place if all safety instructions have been checked and danger can be excluded.*
  - *Check the current consumption! **If the current consumption is higher than that stated on the motor rating plate, the fan must be disconnected immediately.***
  - *Check the direction of rotation (the rotation direction arrow is on the impeller base plate or on the fan housing)*
  - *Watch out for smooth, vibration free motion.*

Repairs and maintenance

- *The system constructor must enable easy access for cleaning and inspection work.*
- ***Wear safety shoes and gloves for handling!***
- *Check the fan for mechanical oscillations in accordance with ISO 14694. Recommendation: every six months. The max. permissible vibration severity is 2.8 mm/s (measured on the end shield of the impeller side of the motor bearing or according to the special service agreement with the customer).*
- *Depending on the use and the medium in which it operates, the impeller and housing are subject to normal wear. Deposits on the impeller can lead to imbalance and hence to damage (risk of fatigue fracture)*
  - *The impeller can disintegrate - lethal hazard!*
  - *Observe the motor manufacturer´s instructions concerning maintenance and service.*
- *Allow maintenance work to be carried out by trained specialists only.*
- ***For all repair and maintenance work:***
  - *Observe the safety and labour regulations (DIN EN 50 110, IEC 364).*
  - *The fan impeller stopped!*
  - *Open the electrical circuit and secure against being switched back on.*
  - *When operating by means of frequency converter, ensure that the waiting time is maintained after safety disconnection - see manufacturer´s operating instructions regarding capacitor discharge time.*
  - *Verify the absence of voltage.*
  - *No maintenance work at running fan!*

– Halten Sie die Luftwege des Ventilators frei - Gefahr durch herausfliegende Gegenstände!
– Flügel nicht verbiegen - Unwucht!
– Achten Sie auf untypische Laufgeräusche!
- Lagerwechsel nach Angaben des Motorherstellers. Fordern Sie hierzu ggf. die Betriebsanleitung an.
- Nach Laufraddemontage und Wiedermontage ist es zwingend erforderlich, die gesamte rotierende Einheit nach DIN ISO 1940-1 neu auszuwuchten.
- Bei allen anderen Schäden (z.B. Wicklungsschäden) wenden Sie sich bitte an unsere Serviceabteilung.
- Laufrad, insbesondere Schweißnähte, auf eventuelle Rissbildung überprüfen.
- ZIEHL-ABEGG Atex-Ventilatoren / Motoren sind ganz oder teilweise mit antistatischer, ableitfähiger Lackierung oder Beschichtung versehen. Ein Nachlackieren kann zu gefährlichen statischen Aufladungen führen und ist daher nicht zulässig.

Reinigung

- Regelmäßige Inspektion, ggf. mit Reinigung erforderlich um Unwucht durch Verschmutzung zu vermeiden.
  – Durchströmungsbereich des Ventilators säubern.
- Achten Sie auf schwingungsarmen Lauf.
- Wartungsintervalle je nach Verschmutzungsgrad des Laufrades.
- Der komplette Ventilator darf mit einem feuchten Putztuch gereinigt werden.
- Zur Reinigung dürfen keine aggressiven, lacklösenden Reinigungsmittel verwendet werden.
- **Verwenden Sie keinesfalls einen Hochdruckreiniger oder Strahlwasser zur Reinigung - schon gar nicht bei laufendem Ventilator.**
- Wenn Wasser in den Motor eingedrungen ist:
  – Vor erneutem Einsatz Wicklung des Motors trocknen.
  – Kugellager des Motors erneuern.
- **Nassreinigung unter Spannung kann zum Stromschlag führen - Lebensgefahr!**

Hersteller

Unsere Produkte sind nach den einschlägigen internationalen Vorschriften gefertigt (Auflistung und Ausgabestände siehe EG-Einbauerklärung und EG-Konformitätserklärung).
Haben Sie Fragen zur Verwendung unserer Produkte oder planen Sie spezielle Anwendungen, wenden Sie sich bitte an:

ZIEHL-ABEGG SE
Heinz-Ziehl-Straße
D-74653 Künzelsau
Tel. 07940/16-0
Fax 07940/16-300
info@ziehl-abegg.de

Serviceadresse

Länderspezifische Serviceadressen siehe Homepage unter **www.ziehl-abegg.com**

– *Keep the airways of the fan free- danger because of objects dropping out!*
– *Do not deform the blades - out-of balance!*
– *Take note of abnormal operating noise!*
- *Replacement of bearings in accordance with the motor manufacturer's instructions. If required ask for our operating instructions.*
- *After dismantling and reinstalling an impeller, the entire rotating unit must be rebalanced in accordance with DIN ISO 1940-1.*
- *Please contact our service department about any other damage (e.g. winding damage).*
- *Check the impeller, in particular the weld-seams, for possible cracks.*
- *ZIEHL-ABEGG Atex-fans / motors are completely or partly covered by antistatic painting or coating, which is able to derivate electric charges. A repaint may lead to dangerous static charges and is therefore not allowed.*

Cleaning

- *Regular inspection, and cleaning is necessary to prevent imbalance due to ingress of dirt.*
  – *Clean the fans`s flow area.*
- *Watch out for vibration free motion.*
- *Maintenance interval in accordance with the degree of contamination of the impeller!*
- *You can clean the entire fan with a moist cloth.*
- *Do not use any aggressive, paint solvent cleaning agents when cleaning.*
- ***Never use a high-pressure cleaner or water-spray for cleaning - particularly when the ventilator is running.***
- *If water enters the motor:*
  – *Dry off the motor winding before using it again.*
  – *Replace motor ball bearings.*
- ***Wet cleaning under voltage may lead to an electric shock - danger to life!***

Manufacturer

Our products are manufactured in compliance with applicable international standards and regulations (listing and relevant version see EC Declaration of Incorporation and EC Declaration of Conformity).
If you have any questions about how to use our products or if you are planning special applications, please contact:

ZIEHL-ABEGG SE
Heinz-Ziehl-Straße
D-74653 Künzelsau
Phone 07940/16-0
Fax 07940/16-300
info@ziehl-abegg.de

Service address

*Please refer to the homepage at **www.ziehl-abegg.com for a list of our subsidiaries worldwide.***

EG-Einbauerklärung

00296718-D

im Sinne der EG-Richtlinie Maschinen 2006/42/EG, Anhang II B

Die Bauart der unvollständigen Maschine:

- Außenläufermotor für explosionsgefährdete Bereiche Zündschutzart „nA“ oder Zündschutzart „e“ MK..
- Axialventilator für explosionsgefährdete Bereiche Zündschutzart „c“ mit Außenläufermotor Zündschutzart „nA“ oder Zündschutzart „e“ FB..
- Radialventilator für explosionsgefährdete Bereiche Zündschutzart „c“ mit Außenläufermotor Zündschutzart „nA“ oder Zündschutzart „e“ RE.., RH..
- Radialventilator für explosionsgefährdete Bereiche Zündschutzart „c“ mit EC-Innenläufermotor Zündschutzart „tc“ RH.., GR..
- Radialventilator für explosionsgefährdete Bereiche Zündschutzart „c“ mit Innenläufermotor Zündschutzart „d“ ER..

Motorbauart:

- Asynchron-Außen- oder Innenläufermotor
- Elektronisch kommutierter Innenläufermotor (mit integriertem EC-Controller)

entspricht den Anforderungen von Anhang I Artikel 1.1.2, 1.1.5, 1.4.1, 1.5.1, 1.5.7 der EG-Richtlinie Maschinen 2006/42/EG.

Hersteller ist die

ZIEHL-ABEGG SE
Heinz-Ziehl-Straße
D-74653 Künzelsau

Folgende harmonisierte Normen sind angewandt:

EN 1127-1:2011	Explosionsfähige Atmosphären - Explosionsschutz - Teil 1: Grundlagen und Methodik
EN 60204-1:2006	Sicherheit von Maschinen; Elektrische Ausrüstung von Maschinen; Teil 1: Allgemeine Anforderungen
EN ISO 12100:2010	Sicherheit von Maschinen; Grundbegriffe, allgemeine Gestaltungsleitsätze
EN ISO 13857:2008	Sicherheit von Maschinen; Sicherheitsabstände gegen das Erreichen von Gefahrstellen mit den oberen Gliedmaßen
Hinweis:	Die Einhaltung der EN ISO 13857:2008 bezieht sich nur dann auf den montierten Berührschutz, sofern dieser zum Lieferumfang gehört.

Die speziellen Technischen Unterlagen gemäß Anhang VII B sind erstellt und vollständig vorhanden.

Bevollmächtigte Person für das Zusammenstellen der speziellen Technischen Unterlagen ist: Herr Dr. W. Angelis, Anschrift siehe oben.
Auf begründetes Verlangen werden die speziellen Unterlagen an die staatliche Stelle übermittelt. Die Übermittlung kann elektronisch, auf Datenträger oder auf Papier erfolgen. Alle Schutzrechte verbleiben bei o. g. Hersteller.

Die Inbetriebnahme dieser unvollständigen Maschine ist so lange untersagt, bis sichergestellt ist, dass die Maschine, in die sie eingebaut wurde, den Bestimmungen der EG-Richtlinie Maschinen entspricht.

Künzelsau, 03.09.2013

Dr. W. Angelis - Technischer Leiter Lufttechnik

i.V. W. Angelis

EC Declaration of Incorporation

00296718-GB

as defined by the EC Machinery Directive 2006/42/EC, Annex II B

The design of the incomplete machine:

- External rotor motor for explosion-hazardous areas, type of protection "nA" or "e" MK..
- Axial fan for explosion-hazardous areas, type of protection "c", with external rotor motor for explosion-hazardous areas, type of protection "nA" or "e" FB..
- Centrifugal fan for explosion-hazardous areas, type of protection "c", with external rotor motor for explosion-hazardous areas, type of protection "nA" or "e" RE.., RH..
- Centrifugal fan for explosion-hazardous areas, type of protection "c", with EC-internal rotor motor for explosion-hazardous areas, type of protection "tc" RH.., GR..
- Centrifugal fan for explosion-hazardous areas, type of protection "c", with internal rotor motor for explosion-hazardous areas, type of protection "d" ER..

Motor type:

- Asynchronous external or internal rotor motor
- Electronically commutated internal rotor motor (with integrated EC controller)

complies with the requirements in Appendix I, Articles 1.1.2, 1.1.5, 1.4.1, 1.5.1, 1.5.7 in EC Machinery Directive 2006/42/EC.

The manufacturer is the

ZIEHL-ABEGG SE
Heinz-Ziehl-Strasse
D-74653 Kuenzelsau

The following standards are applied:

EN 1127-1:2011	Explosive atmospheres - Explosion protection - Part 1: Fundamentals and methodology
EN 60204-1:2006	Safety of machinery; electrical equipment of machines; Part 1: General requirements
EN ISO 12100:2010	Safety of machinery; basic concepts, general principles for design
EN ISO 13857:2008	Safety of machinery; safety distances to prevent danger zones being reached by the upper limbs
Note:	The maintenance of the EN ISO 13857:2008 relates only to the installed accidental contact protection, provided that it is part of the scope of delivery.

The specific technical documentation in accordance with Appendix VII B has been written and is available in its entirety.

The person authorised for compiling the specific technical documentation is: Dr. W. Angelis, address see above. The specific documentation will be transmitted to the official authorities on justified request. The transmission can be electronic, on data carriers or on paper. All industrial property rights remain with the above-mentioned manufacturer.

It is prohibited to commission this incomplete machine until it has been secured that the machine into which it was incorporated complies with the stipulations of the EC Machinery Directive.

Künzelsau, 03.09.2013

Dr. W. Angelis - Technical Director Ventilation Division

i.V. W. Angelis

ZA87ex-GB-10/12 Index 004

english

ZIEHL-ABEGG

A.2 Nicotra Gebhardt RLM... fan

Name	Data
Designation	Fans
Type	RLM...
Number	
Type of manual	Operating manual
Manufacturer	Nicotra Gebhardt

Operating Instructions

EN

ATEX - Plug fans

(Translation of the original)

II 2G c IIB(+H2) T4

BA-CFD-RLM-ATEX 3.9 – 04/2016

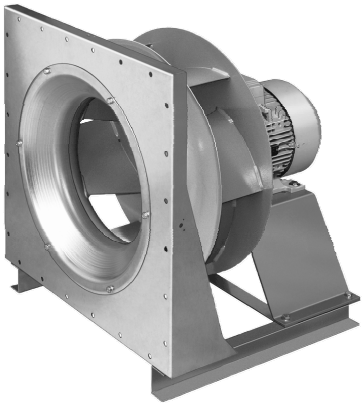	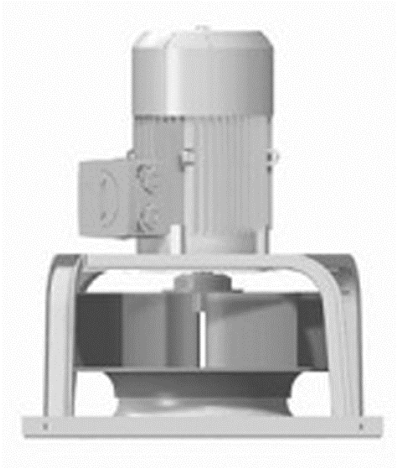	**RLM E6** **RLM E3** **RLM G6**
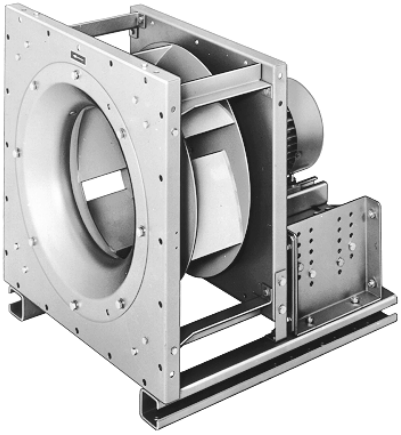	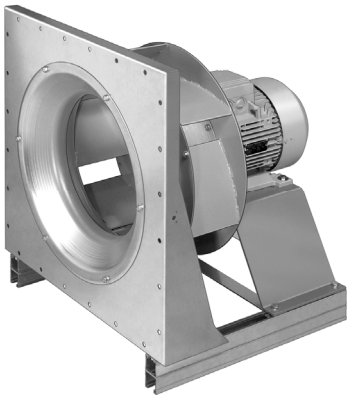	**RLM 55** **RLM 56**

NICOTRA Gebhardt

fan|tastic solutions

Contents

Further languages on request!

1. Revision Index

Table 1-1: Revision Index

Revision	Datum
BA-CFD-RLM-ATEX 3.1 – 08/2011	08/2011
BA-CFD-RLM-ATEX 3.2 – 03/2012	03/2012
BA-CFD-RLM-ATEX 3.3 – 01/2013	01/2013
BA-CFD-RLM-ATEX 3.4 – 03/2013	03/2013
BA-CFD-RLM-ATEX 3.5 – 06/2014	06/2014
BA-CFD-RLM-ATEX 3.6 – 12/2014	12/2014
BA-CFD-RLM-ATEX 3.7 – 03/2015	03/2015
BA-CFD-RLM-ATEX 3.8 – 12/2015	12/2015
BA-CFD-RLM-ATEX 3.9 – 04/2016	04/2016

2. About This Operating Manual

These operating instructions are an integral part of the fan.
Nicotra Gebhardt GmbH shall not accept any liability or provide any warranty cover for primary damage or secondary damage arising as a consequence of disregarding these operating instructions.

- ▶ Read the operating manual carefully before use.
- ▶ Retain the operating manual for the entire service life of the fan.
- ▶ Keep the operating manual accessible to personnel at all times.
- ▶ Pass the operating manual on to any subsequent owner or user of fan.
- ▶ Insert any supplementary instructions received from the manufacturer into the operating manual.

2.1. Validity

This operating manual only applies to the fans stated on the front page

2.2. Target Group

This operating manual is intended for operators and qualified professionals trained in installation, commissioning, operation, maintenance and decommissioning.

2.3. Other Applicable Documents

- ▶ **In addition to reading these instructions, due notice should also be taken of the type plate, warning signs, indicating label on the fan and the following documents and specifications:**
  - IEC 60364-1
  - DIN EN 60204-1
  - DIN EN ISO 13857
  - DIN EN ISO 12100
  - DIN EN ISO 13732-1
  - DIN EN 13463-1; -5
  - DIN EN 1127-1
  - DIN EN 60079-0
  - DIN EN 14986
  - Technical catalogue
  - EU-Directive 2014/34/EU

2.4. Symbols und Markings

2.4.1. Use of Warning Signs

Signal word

Nature, source and consequences of hazard!
- ▶ Steps required to avert danger

2.4.2. Levels of Danger in Warning Signs

Table 2-1: Levels of danger in warning signs

Symbol / Danger Level	Likelihood of Occurrence	Consequences of Neglect
 **DANGER!**	Imminent danger	Death, serious physical injury
 **WARNING!**	Potential danger	Death, serious physical injury
 **CAUTION!**	Potential danger	Minor physical injury
	Potential danger	Damage to property

2.4.3. Notes

Note **Note giving pointers for easier or safe work.**

► Steps required for easier or safe work.

2.4.4. Other Symbols and Markings

Table 2-2: Other symbols and markings

Symbol	Meaning
☑	Requirement for an operation
►	Operation with one step
1. …. 2. …. 3. ….	Operation with several steps
•	Bullet point (primary list)
-	Bullet point (secondary list)
Accentuation (bold)	For emphasis

3. Designated Use

3.1. Operating Data / Maximum Ratings

CAUTION!

Risk of injury!
► Adhere to the technical specifications and permissible limits.

For technical specifications please refer should be made to the type plate, technical data sheet and technical catalogue.

Note **ATEX category II 2G c IIB T4**
Fans of this category are designed for areas where an explosive atmosphere – as a mix of air, gases, vapors or mist - is likely to occur occasionally.
The unit related measures for explosion protection of this category have to offer the necessary amount of safety, even in the case of frequent unit troubles or failure modes, to be usually anticipated (predictable troubles).
For the operation of the fans in explosion hazardous areas the relevant prescriptions, local regulations and directives (ATEX 2014/34/EU) for manufacturers and user have to be respected.

CAUTION!

The installation is authorized in a horizontal shaft position only

Table 3-1: Maximum ratings

Permissible conveyed medium temperatures (ATEX)

Range	Perm. temperature of conveyed medium	Max. ambient temp. on drive motor
RLM 55/56/G6/E6/E3	-20°C ... +40°C (60°C)	+ 40°C (60°C)

3.1.1 Examples of incorrect use include the following:

- Extraction of media with impermissibly high or low temperatures
- Extraction of corrosive media
- Extraction of very dusty media

3.1.2 The results are:

- Bearing damage
- Corrosion damage
- Loss of balance
- Vibration
- Deformation
- Abrasion damage

Unauthorised operation

- No operation above the indicated rpm (see type plate, data sheet)
- No operation at rpm ranges with increased vibration (resonance)
- No operation at rpm ranges out of permitted fan curve area (stability of flow pattern).
- No operation if fan becomes polluted

DANGER!

Danger points:
There can be injury to personnel and material damage through impeller breakage, shaft breakage, fatigue failure, fire (explosions) from spark creation.

3.2. Explosion Protection Markings

The marking on the type label of the explosion proof fans includes the group, category, ignition class and temperature class as well as a CE-Ex-sign thus confirming the conformity to the European directive 2014/34/EU.
The manufacturer's declaration and the declaration of conformity 2014/34/EU (ATEX) are attached to this maintenance instructions.

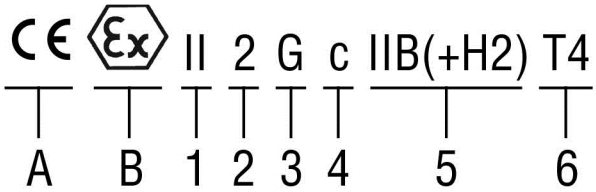

Fig 3-1: Explosion protection markings (example)

A	**CE-Mark**	
B	**Hazardous duty marking**	
1	**Machine group II**	Non-electric machines for use outside of the mining industry and underground mining
2	**Machine category 2**	(internal and external) for use in Zones 1+2; An explosive atmosphere is only present in the area occasionally
3	**Conveyed medium G**	Gaseous conveying medium
4	**Ignition protection c**	Explosion protection through design safety
5	**Explosion group IIB(+H2)***	Type of gaseous atmosphere
6	**Temperature class T4**	max. temperature on machine surface +135°C

* (+ H2) is valid only for RLM E6, RLM G6 and RLM E3:
For hydrogen-containing gas mixtures with max. 4% hydrogen (LEL);
Prerequisite is a material pairing between the rotating parts in steel - copper and the use of an Ex de IIC T4 motor

4. Safety

4.1. Product safety

The fans offer a high degree of operational safety and high quality standards guaranteed by a certified Quality Management System (EN ISO 9001).
Before leaving the factory all the fans are inspected and sealed with a mark of conformity.
Nevertheless, when operating fans supplied by Nicotra Gebhardt GmbH there can be a risk of death or injury for the user or third parties, and a risk of damage to the fan or other material assets.

- Only use the fans in perfect working order and for its designated use as

intended, having due regard for safety, an awareness of hazards and in due compliance with the operating instructions.
- Arrange immediate repair of any faults which could compromise safety.


DANGER!

Potentially explosive gas mixtures in conjunction with hot and moving parts may cause serious or fatal injury.

Risk of explosion due to increased ambient temperature!
1. **Observe ambient temperature**
2. **Ensure adequate supply of cooling air**

4.2. Safety Instructions

The fan may only be commissioned, operated and serviced in compliance with the following instructions:
- Operating instructions
- Warning and information signs on the fan
- Any other operating and installation instructions pertaining to the machine
- Terms and requirements relevant to the machine
- Applicable national and regional regulations, especially regarding explosion protection, health & safety and accident prevention.

4.3. Safety Devices

1. Use appropriate safeguards to prevent contact with rotating parts (shafts, impeller, etc.).
2. Protection devices are so selected so that sucking or falling-in of objects will be prevented.
3. After installation (and before electrical connection) immediately refit any guards which have been removed during installation.


DANGER!

The fans are delivered with inlet guards. If there is a danger of contact with the impeller owing to the way the fan is installed, then it is necessary to fit guards conforming to DIN EN ISO 13857.
Only then can the fan be set in operation!


DANGER!

ATEX fans of categories 2G or 3G are made for integration into installations. Care must be taken to avoid any ingress of object into the fan. (min. IP20 to EN 60529).
The user has to find corresponding protection in order to ensure a safe operation!


CAUTION!

The suitability of protection devices and their fixtures to the fan have to be evaluated within the overall security concept of the installation.

4.4. Professional Staff

1. Ensure that the Installation of the fan and any work on it is carried out by skilled professionals only with due regard to these operating instructions and any applicable regulations.
2. Electrical connection to be carried out by qualified electricians only.

4.5. Protective Gear

CAUTION!

Ensure that members of staff are wearing protective gear appropriate to their deployment and environment.
The protective clothing is specified below!

4.6. Specific Hazards

4.6.1. Noise Emission

The sound emission expected during normal use of the fan is documented in the technical lists and should be duly taken into account.

- ► **Wear ear defenders when working near to or on the running fan!**

4.6.2. Heavy Loads

The heavy weight of the fan and its components entail the following risks in transit and during installation:

- Risk of being trapped, crushed or cut by moving or toppling machinery
- Danger of falling components

- ► **Do not stand or work under suspended loads.**
- ► **Wear a hard hat, safety shoes and gloves.**

4.6.3. Rotating Shafts and Impellers

Objects falling onto rotating shafts and impellers can fly off at an angle and cause serious injury.
Articles of clothing and hair can get caught in rotating shafts and impellers.

- ► **Do not remove guards during operation.**
- ► **Do not wear loose-fitting clothing when working near rotating shafts and impellers.**
- ► **Wear goggles.**

4.6.4. Hot Surfaces

There is a risk of sustaining burns or scalds on hot surfaces during operation.

- ► **Do not touch the motor during operation.**
- ► **When the fan has stopped wait until the motor has cooled down.**
- ► **Wear protective gloves.**

4.7. Structural Modifications, Spare Parts

Note **Unauthorised structural modifications may not be made to the fan without the consent of Nicotra Gebhardt GmbH.**
Nicotra Gebhardt GmbH shall not accept liability for any damage arising as a result such modifications.

Use only genuine spare parts supplied by Nicotra Gebhardt GmbH.

In areas subject to explosion hazards the fan may only be modified or converted by Nicotra Gebhardt GmbH itself, by a service location approved by the company, or by personnel authorised and trained by the company.

4.8. Installation and Maintenance

The following steps should be taken before working on the fan:

1. Ensure that the atmosphere is not potentially explosive.
2. Switch off the machine and take measures to prevent it from being switched back on accidentally.
3. Display the following message on a sign:
   Do not switch on! Work currently in progress on the machine.

4.9. Signs on the Fan

Depending on the model, the type plate and the arrow indicating the direction of rotation are fitted to the fan for high visibility.

4.9.1. Type plate

Fig 4-1: Example type plate

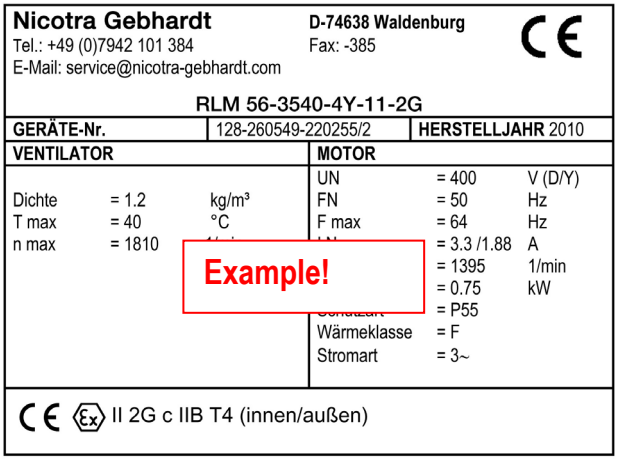

4.9.2 Arrow Indicating Direction of Rotation

Fig 4-2: Arrow indicating direction of rotation

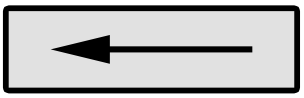

4.9.3 Terminal Board Circuit Diagram

Fig 4-3: Example circuit diagram

The wiring diagram is in the terminal box of the motor.

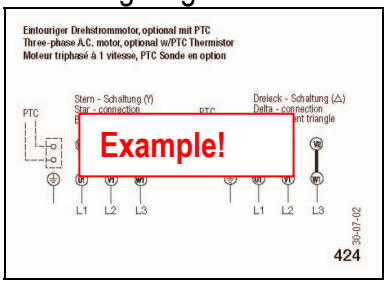

5. Product Description

5.1. Centrifugal fan RLM without housing, direct driven (Plug Fan)

Plug fans RLM are optimized for operation without scroll. Direct drive with IEC motor. The centrifugal impeller with backward-curved blades is fitted directly to the motor shaft. The fan unit consisting of impeller with inlet cone, motor block and base frame, installed and adjusted at the factory. The fans are equipped with a volumeter as a standard.

Plug fans RLM are comply to the requirements of ATEX-Directive 2014/34/EU by designed safety and safe construction according to EN 13463-1 and -5; EN 14986. The classification of these fans is fitting into group II, category 2G, Explosion group IIB(+H2), Temperature class T4.

Materials:

- **Impeller** made of sheet steel, ATEX special coated.
- **Inlet cone** made of copper.

Note **The ATEX fan must not be modified by the user. Any modification will render ATEX conformity invalid.**

5.2. Centrifugal fan (Plug fan) RLM

5.2.1 Centrifugal fan direct driven RLM

RLM 55-1112/-1214 **RLM 56-2528/-1011 / RLM E3 –2528/-6371 RLM G6-2225 / RLM E6-2528/-1011**

Figure 5-1: Ranges

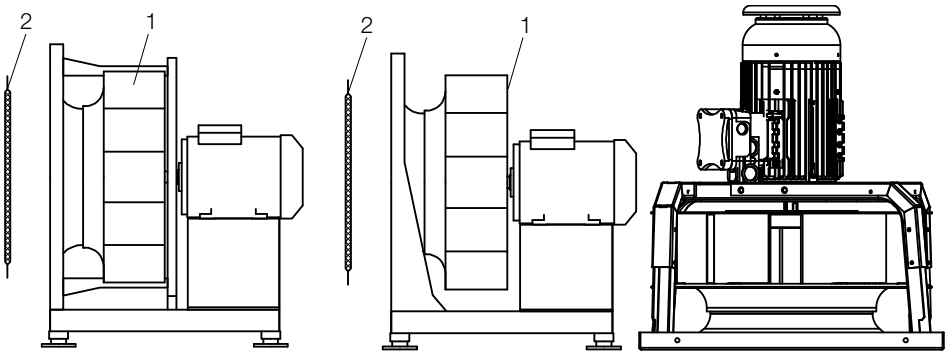

1. Fan
2. Inlet guard
   - Safety of machinery DIN EN ISO 13857
   - Degrees of protection DIN EN 60529

6. Transport and Storage

6.1. Packaging

Fans are packaged in sturdy cardboard boxes or wooden crates depending on their size and weight. Instructions for removing transportation locks are enclosed.

6.2. Symbols on Packaging

The following symbols are printed on the cardboard boxes:

Table 6-1: Symbols on packaging

Symbol			
Meaning	Handle with care	Keep dry	Top

6.3. Transportation of Plug fans

WARNING!

Danger of injury from falling components!
Use tested and appropriate load handling equipment only (see type plate or data sheet). Transport the fan in the original packaging for as long as possible. Secure the load

- **Do not stand under suspended loads**

1. Select means of transport according to weight and dimensions of fan. Fan must be attached at the base frame, base plate or supporting plate. (For weights please see the technical catalogue)
2. Lift the fan by the base frame and/or by the carrier plate only.
3. When using transport belts always provide 4 points of suspension (2 belts). The belt may not exert a deforming force on the fan or its packing. If necessary, use a spacer!
4. Secure load with belts or fix it against sliding!
5. Handle centrifugal fan with care to prevent damages avoid e.g. shock or rough placement.

These are NOT fixing points at the fan!

- Motor lifting ring bolt
- Impeller
- Inlet cone

6.4. Storage of Centrifugal Fan

Risk of corrosion!

- ▶ Store the fan in its packaging adding any other protection dictated by its storage environment.
- ▶ Store centrifugal fan in a well-ventilated room only at normal temperatures and in a non-corrosive atmosphere.
- ▶ Store centrifugal fan in conditions registering less than 70 % atmospheric humidity.
- ▶ Adhere to max. permissible temperature of -20°C to +40°C (60°C).

7. Installation

7.1. Safety Instructions for Installation

- ▶ Observe the safety instructions and preventive measures in Chapter 4 and the relevant legal requirements.

The ATEX- fan system supplied by Nicotra Gebhardt must not be modified in any way! Its operation is exclusively permitted in it's state as originally supplied and within the LIMITS SPECIFIED. (Respect catalogue- and type plate data).

7.1.1. Installation notes

In order to achieve a sufficient motor cooling, care has to be taken that the fan at motor side is keeping a minimum clearance (L1) to the next wall. For disclosures on L1 refer to the motor operating instructions.

Figure 7-1: Clearance

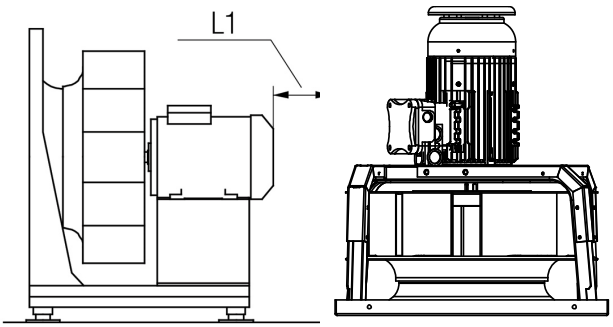

RLM E3: only vertical mounting, air flow direction from bottom to top.
Minimum distance determined by motor protection cover.

7.2. Preparation to Installation

- ☑ The place of installation must be suitable for the fan in terms of its category, condition, ambient temperature and environmental media.
- ☑ The base must be level and have sufficient load-bearing capacity.

1. Unpack centrifugal fan carefully.
2. Unfasten or dismantle transport locks
3. Packing material to be fully removed and disposed.
4. Check gaps as per 7.4.

7.3. Carrying out the Installation

1. The fan or base frame must be fixed without stressing to the supporting structure.
2. loose fitted AVM to be regularly placed around centre of gravity and definitely fixed. Check whether the AVM is evenly under load.
3. Ensure that the fan is earthed in accordance with regulations. The anti-vibration mounts themselves do not ensure electrical transmission.

- ☑ No forces or vibrations may be transferred from other plant parts to the fan (flexible connection)!
- ☑ The flexible connections (ATEX) at intake and/or discharge are installed, well aligned, freely moving and earthed plant side.
- ☑ The AVM are freely moving and under even load!

☑ The impeller is turning idly and does not touch the intake cone!
☑ The distances from the impeller to the plant parts on site are checked and meet the requirements for explosion protection.
☑ The stability of the fan against collapse of the fan has been checked.

7.4 Checking the Gap Dimension on the Fan

▶ **Check gap between impeller and inlet cone and between impeller border and pressure measuring nipple of the volumeter against chart values below!**

Figure 7-2: Gap width

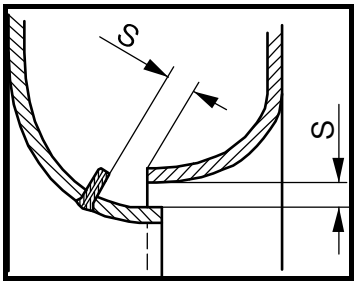

Table 7-1: Gap width

RLM	Gap width „s“	RLM	Gap width „s“
2225	2,0	**5663**	4,3
2528	2,0	**6371**	4,8
2831	2,2	**7180**	5,4
3135	2,4	**8090**	6,0
3540	2,7	**9010**	6,7
4045	3,0	**1011**	7,5
4550	3,4	**1112**	8,5
5056	3,8	**1214**	9,5

Figure 7-3: Measured points

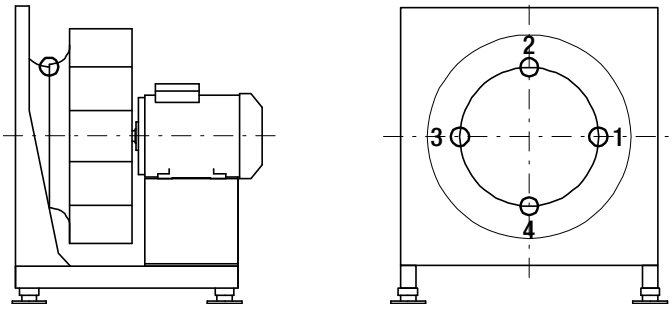

1. Measure the gap and ensure that the width of the gap does not fall below the threshold in any phase of the rotation (manual rotation).
2. Carry out measurements on four 90° points on the circumference. Ensure that the gauge is placed on the outer diameter of the inlet cone.

7.5 Volumeter

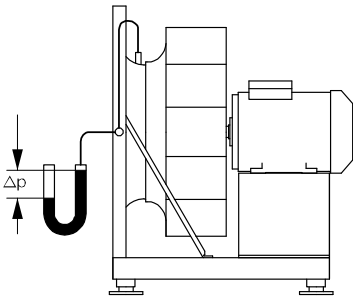

The fans are equipped with a volumeter as a standard. With this flow measuring device it is possible to measure/monitor the flow easily after the fan is installed.

- Measuring nipple on intake cone
- piping to connector at support unit
- connector (external diameter 6mm) to pressure measuring device

Figure 7-4: Volumeter

$$qv = K \times \sqrt{\frac{2}{\rho} \times \Delta p_{Dü}}$$

q_V	volume flow [m³/h]
K	calibration factor [m²s/h]
ρ	density of media [kg/m³]
$\Delta p_{Dü}$	pressure difference at cone [Pa]

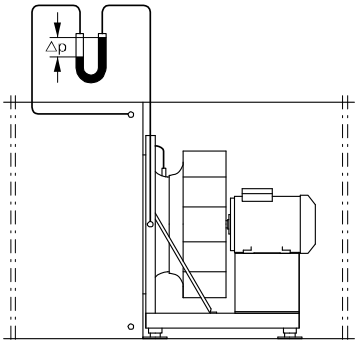

Figure 7-5 :Built in fan

When fans are built in a plenum, it is required to measure the differential pressure between the static pressure in the plenum on the suction side and the pressure at the inlet cone.
To ensure that the static pressure to be measured at the inlet nozzle is not distorted by dynamic velocities, it is recommended to attach a ring-line of measuring points on the wall as shown in the following diagram.
When using a differential pressure sensor, the signal can be used for automatic control purpose.
For calculation of the flow rate a calibration coefficient (K-factor) for every fan required this is determined by comparative measurement on a standard test rig with none disturbed air flow at suction.

K-Factor deviation
Standard calibration
K10 < 10%

RLM E6- E3-G6	Calibration factor K10	RLM 56- 55-	Calibration factor K10
2225	73 m²s/h	**2528**	73 m²s/h
2528	79 m²s/h	**2831**	90 m²s/h
2831	94 m²s/h	**3135**	105 m²s/h
3135	106 m²s/h	**3540**	120 m²s/h
3540	128 m²s/h	**4045**	150 m²s/h
4045	155 m²s/h	**4550**	190 m²s/h
4550	190 m²s/h	**5056**	240 m²s/h
5056	242 m²s/h	**5663**	300 m²s/h
5663	310 m²s/h	**6371**	385 m²s/h
6371	385 m²s/h	**7180**	485 m²s/h
7180	490 m²s/h	**8090**	620 m²s/h
8090	628 m²s/h	**9010**	790 m²s/h
9010	794 m²s/h	**1011**	1000 m²s/h
1011	1017 m²s/h	**1112**	1260 m²s/h
		1214	1540 m²s/h

7.6 Install Protection Devices

1. Fit guards to protect exposed inlet openings (EN ISO 13857).
2. Design safety devices in such a way that they prevent objects from being sucked in or from falling in (see EN 60529).

8. Electrical Connection

8.1. Safety Instructions for Electrical Connection

DANGER!

Danger of electric shock!
- ▶ Observe the safety instructions and preventive measures in Chapter 4 as well as the relevant legal requirements.
- ▶ EN 60204-1, IEC 60364 / DIN VDE 0100; DIN EN 60079-0, VDE 0170-1 DIN EN 60079-14, VDE 0165-1.

All fans are delivered ready for connection. The terminal box is easily accessible. The wiring diagram is in the terminal box.
No mains connection operation allowed for models with max. operating frequency <50 Hz!

Note As a standard feature the fans are suitable for operation by a frequency inverter. When operating the fans together with frequency inverter or control equipment containing electronic components the manufacturer's recommendations of are to be observed concerning radio noise suppression (EMC) (through suitable earthing, cable lengths, cable screening, etc.).

Inspection switches, electronic control units and frequency converters can cause material damage!
- ▶ Do not use electronic control units or frequency converters in areas subject to explosion hazards.
- ▶ Install inspection switches - except inspection switches approved for areas subject to explosion hazard – outside the area subject to explosion hazards.

Note The standard motors are classified as protection category "Explosion proof Ex de II", temperature class T4 for ambient temperature from -20°C to +40°C (60°C) in accordance with Directive 2014/34/EU (ATEX) and IEC/EN 60079-0, IEC/EN 60079-1.

- ▶ Current, voltage and frequency of mains supply checked for conformity with fan type plate and motor rating plate.
- ▶ Star-delta or soft start provided for motors with a nominal output >4 kW.
- ▶ Adhere to the output limits imposed by the power supply company.
- ▶ If necessary, an Isolator must be provided(outside the area subject to explosion hazards)
- ▶ All components are provided with an earthing. The fan components are electrically connected to each other.
- ▶ **The fan is protected against unexpected start!**
- ▶ **Chapter 4. „Safety" must be respected!**

8.2. Electrical connection of the motor

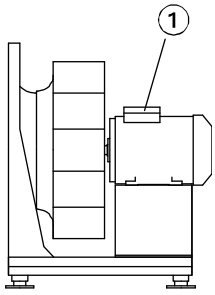

Figure 8-1 Connection box

1. Fit inspection switch if applicable.
2. Connect feed line to fan or service switch.
3. Connect motor as shown on connection diagram supplied.
4. Ensure that all the electrical safety devices have been fitted and connected.

1 = Connection box

8.3. Motor Protection

Protect motors against overload in accordance with DIN EN 60204-1.

- Speed controlled, pressure resistant encapsulated motors, equipped with certified PTC-thermistors have to be operated – in the case of explosion proof application – with an ATEX certified tripping unit!
- Only motors conforming to the corresponding ATEX – category of the fan are permitted.
- Motor protection switches must be set to the nominal motor current (see type plate). A higher setting value is not admitted!
- Respect the te-time for overload protection indicated on the motor type plate.

Fuses or circuit breakers do not provide sufficient motor protection. Damage due to insufficient motor protection invalidates the manufacturer's guarantee.

Note **In all cases the power limitations provided by the existing power supply company must be taken into account.**
If plant conditions necessitate a direct start the suitability of the fan design must be confirmed with Nicotra Gebhardt. Fans with high inertia impellers can take over 6 seconds to reach top running speed. In these cases heavy duty motor protection relays or bimetal relays must be provided.

8.4. Carrying out a Test Run


DANGER!

Risk of injury from rotating impeller!
► Never reach into the impeller when the fan is open.

1. Take measures to prevent the centrifugal fan from being switched on accidentally
2. Clear the ducting system and fan of all foreign bodies (tools, small parts, construction waste, etc.
3. Close all the inspection openings.
4. Switch on the fan and check the direction of rotation of the impeller by comparing it with the arrow on the fan indicating the direction of rotation.
5. If the direction of rotation is wrong, reverse the polarity of the motor having due regard to the safety instructions.

6. Once operating speed has been reached measure the current consumption and compare it with the nominal motor current on the fan type plate or motor rating plate
7. If there is continuous overload switch the fan off immediately.
8. Check that the fan runs smoothly and quietly. Ensure that there are no unusual oscillations or vibrations.
9. Check the motor for any abnormal noises.

9. Commissioning

The motors are designed for continuous operation S1. If operations involve more than three starts per hour Nicotra Gebhardt GmbH shall be required to confirm the suitability of the motor.

DANGER!

Potentially explosive gas mixtures in conjunction with hot and moving parts may cause serious or fatal injury.

Risk of explosion due to increased ambient temperature!
1. **Observe ambient temperature.**
2. **Ensure adequate supply of cooling air.**

9.1. Conditions for Commissioning in Ex-Area

The following requirements must be met before operating the fan in areas subject to explosion hazards:

- ☑ Specifications on the type plate to meet the standards required in the local operating conditions in respect of explosion hazards (machine group, explosion hazard category, explosion hazard zone, temperature class).
- ☑ All the components connected to the fan carrying a risk of ignition or explosion to have the required approval certificates.
- ☑ The ambient temperature during subsequent use to be within in the allowed limits!
- ☑ All the requisite safety devices to be installed.
- ☑ Prevent impeller from contact and from being hit by falling or sucked-in objects.
- ☑ The fan is not operated in a dusty environment.
- ☑ Ensure that unacceptable levels of dust are not allowed to gather on the fan.
- ☑ The distances from the impeller to the plant parts on site are checked and meet the requirements for explosion protection.
- ☑ Ensure that the fan is earthed in accordance with regulations.

9.2. Commissioning the Centrifugal Fan

DANGER!

Risk of injury from rotating parts and hot surfaces!
1. Ensure that all the safety devices are fitted.
2. Ensure that the impeller has been secured acc. to DIN EN ISO 13857!

Commissioning

1. Check the working order of all the connected control instruments.
2. **Switch on the centrifugal fan.**

10. Maintenance

10.1. Safety Instructions for Maintenance

- ▶ Observe the safety instructions and preventive measures in Chapter 4 as well as the relevant legal requirements.
- ▶ Follow the directions of the motor supplier and the instructions specified by the manufacturers of the switches and control units.

WARNING!

Work on the fan is only permitted when the power supply is fully cut!

Pressure washers can cause damage to property!

- ▶ **Do not use pressure washers (steam jet cleaners) to clean the equipment.**

Breakdown and hazard because of leaking gas media.

- ▶ **Exchange leak flexible connections.**

10.2. Observing Regular Inspection Intervals

In the interests of upkeep and safety we recommend having the operation and condition of the fans inspected at regular intervals by duly qualified service personnel or a professional maintenance firm and documenting these inspections. The nature and extent of the maintenance work, the service intervals and any additional work required needs to be specified on a case-by-case basis depending on the use of the fans and the general conditions on site. Our servicing and inspection recommendations based on VDMA 24186-1 can be found on our website.

10.3. Preparing for Maintenance

1. Disconnect the motor from the mains.
2. Plug fans fitted with an inspection switch should be switched off using the inspection switch.
3. Take measures to prevent the centrifugal fan from being switched on accidentally.
4. Wait until the impeller has stopped.
5. Wait until all hot surfaces have cooled down.
6. Remove any residues from the fan.
7. Depending on the situation installation components may be dismantled for inspection and maintenance.

☑ **Preparation for maintenance is completed**

10.4 Maintenance recommendations for Fans RLM-ATEX

Table 10-1: Maintenance recommendation

- ▶ Conduct test run if applicable (see Chapter 8.4).
- ▶ Document inspection intervals observed.

	Description	quarterly	cyclic	on demand
1.0	**Fan**			
1.1	Check deposit, damages, corrosion and fixing	**X**		
1.2	Check impeller for damage and unbalancing, vibration check	**X**		
1.3	Check the axial and radial gap	**X**		
1.4	Check flexible connections for tightness	**X**		
1.5	Check correct function of AVM	**X**		
1.6	Check correct function of safety devices (guards)	**X**		
1.7	Check condensate water drain	**X**		
1.8	Clean entire unit in order to keep all elements in best working conditions	**X**		
1.9	Check rotational sense of impeller (for all speeds)	**X**		
2.0	Check fan function and its readiness for immediate start up		**X**	
2.1	**Motor**			
2.2	Visual control for dirt, damages, corrosion and correct fixing	**X**		
2.3	Check rotational sense	**X**		
2.4	Check bearing noise	**X**		
2.5	Lubricate bearing (where bearings are re-lubricable)		**X**	
2.6	Check correct function of safety devices (guards)	**X**		
2.7	Check tight electrical connections on tight fixing	**X**		
2.8	Clean entire unit in order to keep all elements in best working conditions	**X**		

10.4.1 Vibration monitoring

The fan has to be frequently checked for vibrations. The max. vibration velocity values admitted are those which relate to ISO 14694.

Table 10-2: Vibrations

Fan with AVM		**Fan without AVM**	
Motor power	**Vibration velocities**	**Motor power**	**Vibration velocities**
≤ 3,7 kW	**9,0 mm/s**	≤ 3,7 kW	**5,6 mm/s**
> 3,7 kW	**6,3 mm/s**	> 3,7 kW	**4,5 mm/s**

These vibration velocities are to be measured in a radial direction on the bearing or bearing casing of the motor.
Deposits of dirt and dust on the impeller can cause unbalancing and subsequent damages. In order to prevent this danger frequent inspections and cleaning measures have to be carried out depending on the degree of possible deposit.

10.4.2 Motor bearings

The motor bearings are supplied permanently lubricated by the factory; experience has shown that the grease needs to be changed only after several years only under normal operating conditions.
In the case of bearing noise please contact Nicotra Gebhardt-Service for a check and a possible change of defective bearings.

10.4.3 Periods of stand still

During longer periods of standstill the fan must from time to time be put into operation for a short while. This is to avoid bearing damages due to the mechanical load and ingress of humidity.
After longer periods of storage, the fan and motor bearings have to be checked prior to installation.
If the condition of the fan does not allow modified repair measures it must be put out of commission and be replaced immediately if required.

11. Faults

If any faults occur during operation which cannot be repaired by maintenance personnel please contact the service department at Nicotra Gebhardt GmbH.

DANGER!

Risk of explosion caused by improper operating states!
- ► Switch the fan off immediately if permissible limits are exceeded and in the event of irregularities or faults.

12. Service, Spare Parts and Accessories

Nicotra Gebhardt GmbH
Gebhardtstraße 19–25
74638 Waldenburg
Germany

Phone: +49 (0) 7942 101 384
Fax: +49 (0) 7942 101 385
E-mail: info@nicotra-gebhardt.com
www.nicotra-gebhardt.com

12.1. Ordering Spare Parts

- Use only genuine spare parts supplied by Nicotra Gebhardt GmbH as featured in the list of spare parts.

The use of spare parts supplied by other manufacturers may compromise the safety of the equipment. Nicotra Gebhardt GmbH shall not accept any liability or provide any warranty cover in respect of primary or secondary damage arising as a consequence of using spare parts supplied by other manufacturers.
Spare parts can be ordered online at -- www.nicotra-gebhardt.com/Partshop

12.2. Accessories

Nicotra Gebhardt GmbH has a wide range of accessories for the economical and efficient use of its fans.
Accessories are optional and always need to be ordered separately.
Spare parts should be selected on the basis of the technical specifications or via our electronic selection program. Accessories are supplied with separate operating or installation instructions unless their installation or uses are self-explanatory.

13. Annex

13.1 Further Documentation Supplied by Nicotra Gebhardt GmbH

Tabelle 13 1: Further documentation

Type of Documentation	File Location
Maintenance and inspection recommendations	Internet
EU-Declaration of Conformity 2014/34/EU (ATEX)	Annex
EC-Declaration of Incorporation	Annex

EU Declaration of Conformity
to EU Council Directive 2014/34/EU (ATEX)

The manufacturer:	**Nicotra Gebhardt GmbH**, Gebhardtstrasse 19-25, 74638 Waldenburg, Germany herewith declares, that the machinery designated below, on the basis of its design and construction in the form brought onto the market by us is in accordance with the relevant safety and health requirements of the EC Council Directive as mentioned below. If any alterations are made to the machinery without prior consultations with us this shall render the declaration invalid.
Designation:	**Plug fans without scroll of categories 2G for conveying explosive atmosphere**
Machine type:	**RLM 55-….-2G; RLM 56-….-2G;** **RLM E6-…. -.Y-..-.; RLM E3-…. -.Y-..-.; RLM G6-…. -.Y-..-.**
Category:	**II 2G c IIB T4 Gb ; II 2G c IIB+H2 T4**
Year of Production/Type:	**See type plate**
Relevant EC Council Directive:	**EU Directive 2014/34/EU (ATEX)**
Statement of deposition:	**EX9 12 10 78300 006 (RLM E6 + RLM G6)** **EX9 14 11 78300 007 (RLM E3)** **EX9 11 09 78300 003 (RLM 55/56)**
Name of Notified Body:	**TÜV SÜD Product Service; Zertifizierstelle; Ridlerstraße 65; 80339 Munich; Germany**
Applied harmonized standards [1], in particular:	**DIN EN 13463-1, DIN EN 13463-5, DIN EN 1127-1, DIN EN 14986** **It is the responsibility of the manufacturer or contractor to ensure that conformity to these standards is observed when installing the fan in a machine or system.**

Waldenburg, 20.04.2016

i.V. I. Stöbe
Head of production

i.V. Dr. J. Anschütz
Research and Development Director

[1] The complete listing of applied standards and technical specifications please see manufacturer's documentation.

EC-Declaration of Incorporation

The manufacturer:	**Nicotra Gebhardt GmbH**, Gebhardtstrasse 19-25, 74638 Waldenburg, Germany
	herewith declares, that the following product:
Product designation:	**Plug fan**
Type nomination:	**RLM 55-….-2G; RLM 56-….-2G;** **RLM E6-…. -.Y-..-.; RLM E3-…. -.Y-..-.; RLM G6-…. -.Y-..-.**
Serial n°:	**see type plate**
Year of manufacture:	**see type plate**
	qualifies as a partly completed machine, according to Article 2, clause "g" and complies with the following basic requirements of the **Machine Directive (2006/42/EC): Annex I, Article 1.1.2; 1.3.7.** The partly completed machine may be put into operation only if it has been stated that the machine into which the uncompleted machine has to be incorporated complies with the requirements of the Machine Directive (2006/42/EC).
The following harmonised standards[1)] have been applied:	**DIN EN ISO 12100** Safety of machines – General design principles **DIN EN ISO 13857** Safety of machines – Safety distances to hazardous areas
	The manufacturer is committed to providing the special documents for partly completed machines to any state authority on request.

Waldenburg, 15.12.2015

Representative for the documentation: Michael Hampel

i.V. I. Stöbe
Head of production

i.V. Dr. J. Anschütz
Research and Development Director

[1)] The complete listing of applied standards and technical specifications see manufacturer's documentation.

Nicotra Gebhardt GmbH
Gebhardtstrasse 19-25
74638 Waldenburg
Germany

Telefon +49 (0)7942 1010
Telefax +49 (0)7942 101170
E-Mail info@nicotra-gebhardt.com

www.nicotra-gebhardt.com

A.3 GEA pocket filter

Name	Data
Designation	Pocket filter
Type	Multisack G85 EX
Number	
Type of manual	Operating manual
Manufacturer	GEA

Proper use of the GEA explosion protected bag filters Multisack G85 EX stipulates compliance with the current operation manual. This manual must always be available at the site where the unit is in operation. Every person working on or with the GEA explosion protected bag filters of series Multisack G85 EX must read and understand this operation manual fully.

1. Technical Data

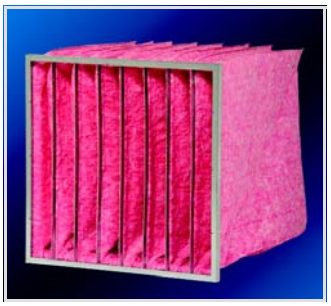

Type/designation	Dimensions W x H x D [mm]	Number of bags [quantity]	Filter surface [m²]	Max. rated air flow rate [m³/h]
Bag filter G85 EX	592 x 592 x 600	8	2.6	4,250

Filter class	Norm	Initial pressure difference [Pa]	Max. end pressure difference [Pa]	Air flow velocity [m³/h]	Order number
F7	EN 779	91.7	450	3,400	10 42 646

Specifications:
Frame material: Galvanized metal sheet
Filter medium: Micro glass fibre
Max. operating temperature [°C]:-40 to +80
Max. relative humidity [%]:90
Filter with grounding element

Notes:
Identification of explosion protection:II 2 GD IIB T6 (-40°C to +°80)
Explosion protection conformity: RL 94/9/EG
Unit category 2, group II RL 94/9/EG
Application in zones 1, 2, 21, 22 RL 999/92/EG

2. Safety Instructions

Proper use

GEA explosion protected bag air filters of series Multisack G85 EX of the equipment category 2, group II in accordance with the EU directive 94/9/EG on explosion risk in areas with an explosive atmosphere or EN 13463-1:2001 are exclusively used to filter solid matter particles and dust of any kind and size out of air in air handling systems. Filtered air can be charged with foreign matter and the relevant surroundings can be classified as an explosion risk areas in accordance with 1999/92/EG directive on explosion protection. GEA explosion protected bag air filters of series Multisack G85 EX are exclusively suitable in explosion risk areas in zones 1, 2, 21 and 22 in accordance with 1999/92/EG directive on explosion protection.

Further process instructions and regulations on explosion risk prevention in terms of 1999/92/EG directive as well as other usually applied directives on using, handling, maintenance and recycling of air filters for air handling units SWKI 2003 as well as VDI 6022 must be taken into account.

Label

The supplied label must be attached on the external side of a service door of an air handling unit. The label must be clearly visible and accessible.

GEA explosion protected bag filters of series Multisack G85 EX are installed in air handling units that are classified as explosion risk areas according to 1999/92/EG and 94/9/EG directives on explosion risk protection. The Multisack G85 is not suitable for explosion risk areas where hybrid mixtures lead to explosion hazards.

Possible electrostatic charges of the GEA explosion risk protected bag filters of the series Multisack G85 EX are continuously diverted without special structural changes or technical measures if the following conditions are met:

- The air filter frame must always have an electrically conductive connection with the relevant filter retainer. For this purpose - an additionally supplied grounding set must be mounted and secured. This grounding set must be mounted in such a way that self-removal or accidental removal because external influence is prevented (➠ refer to section „3. Installation“).
- The filter retainer as well as all electrically conductive components of an air handling unit must be grounded. This can be achieved by using conductive contact surfaces between components (direct contact) or an electrical conductor (e.g. grounding cable).

Air flow velocity and rated air flow rate

Air flow velocity through filter may not exceed 10 m/s and rated air flow rate specified in the technical data may not be exceeded under any circumstances.

In case of proper use of the GEA explosion protected bag filters at specified rated air flow rate the air flow velocity through filter medium will not exceed 0,5 m/s even if the filter has reached the intended operating life or compulsory maximum end pressure difference. The standard value for dimensioning is specific maximum air flow rate 0,3 m³/s per m² of filter surface. It must always be possible to check the maximum rated flow rate (➠ refer to section „1. Technical Data“) of the unit by using check and monitoring devices (e.g. differential pressure monitor or flow measuring devices).

3. Installation

Pre-installation work

- Make sure that the planned installation location is suitable for the operation of the GEA explosion protected bag filter. This comprises the following:
  – The classification of the installation site as a hazard zone according to RL 1999/92/EG
  – Availability of a company internal document on explosion risk protection in accordance with RL1999/92/EG and the occupational safety codes and regulations.
- Remove the GEA explosion protected bag filter Multisack G85 EX from its packaging outside the explosion risk zone:
  – Handle the bag filter with care and do not damage the filter medium
  – Inspect the bag filter for any external damage and check if the grounding set is complete (operation manual and explosion protection label); if the filter is damaged or the grounding set is missing - the filter may not be mounted.

Installation

- Loosen the old grounding set from the unit.
- Remove the old bag filter including the grounding set.
- Carry out all necessary cleaning of the unit.
- Insert the new GEA explosion protected bag filter Multisack G85 EX in the unit and secure the filter using filter retainers.
- Screw the grounding electric cable with a ring tongue lug to grounded unit component together (e.g. filter retainer, slide in frame, monoblock etc.) in such a way that self or accidental removal without a tool is impossible.

✓ An electrically conducting connection between air filter frame and unit component must be ensured!

- Check the ring tongue lug for secure seat.
- Check electric resistance between filter frame and unit component using an ohmmeter – no matter where the measuring point is - electric resistance may not exceed 1 MΩ (Mega-Ohm).

4. Operating Life/Durability of the GEA Explosion Protected Bag Filter Multisack G85 EX

The characteristics and features of the GEA explosion protected bag filter Multisack G85 EX are the same as with conventional bag filters of the same type and same configuration.

- Replace the bag filter when the maximum allowed end pressure difference is reached. It can be assumed that the maximum allowed end pressure difference amounts to a standard value with initial pressure difference plus 100 Pascal of pressure drop increase. Refer to section "1. Technical Data" for the effective maximum allowed end pressure difference.
- Moreover, consider the recommendations of the hygiene directive SWKI 2003-5 and VDI 6022 in terms of the maximum service life.

A.4 EMW compact filter

Name	Data
Designation	Compact filter
Type	ATEX filter
Number	
Type of manual	Instruction manual
Manufacturer	EMW filtertechnik

Instructions for ATEX Air Filters

In conformance with ATEX Directive 94/9/EC Appendix II

Before starting with installation, **read these instructions completely** and follow them exactly. Not following the instructions can result in serious injuries and/or damages. Before carrying out installation, check to be sure that the filter selected is suitable for your intended application.

In accordance with legal regulations the installation of the filter may be carried out by qualified installation technicians only.

1) START-UP INSTRUCTIONS

1.1) APPLICATION

ATEX air filters are used to filter dust-laden gaseous substances in potentially explosive atmospheres.

1.2) USE AND MARKING OF THE PRODUCT

(in conformance with ATEX Directive 94/9/EC)

Intended use of the product: filtration of gaseous substances with dust content.

The filter can be used in potentially explosive atmospheres as follows:

Gas:
- zones 0, 1 or 2 (models with **fabric handles** are **not suitable** for usage in **zone 0**)
- gas groups IIA, IIB or IIC (models with **fabric handles** are **not suitable** for usage in **gas group IIC**)

Dust:
- zone 20, 21 or 22 (models with **fabric handles** are **not suitable** for usage in **zone 20**)
- conductive dusts must be excluded from these applications

Marking:

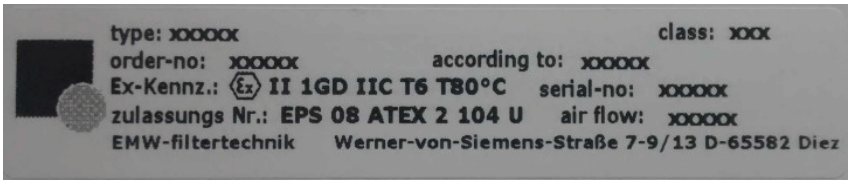

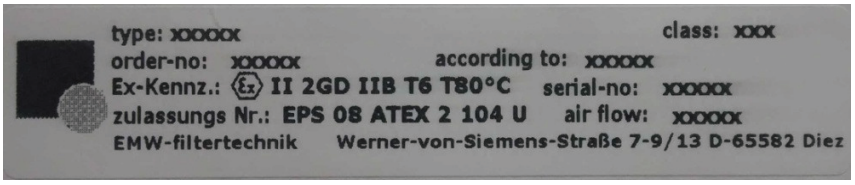

1.3) STANDARDS

When installed and used in accordance with operating instructions, this product conforms to the following standards: EN 13463-1 (2009)

1.4) MECHANICAL PROPERTIES

Used for:	Final filtration or pre-filtration of dust-laden, potentially explosive atmospheres, filter classes F6/M6 up to U15
Storage temperature:	-10 to +40°C
Operating temperature:	-40 to +80°C
Relative humidity:	5% to 95%, without condensation

EMW filtertechnik GmbH
Werner-von-Siemens-Strasse 7-9/13
D-65582 Diez / Germany

Kontakt:
Tel.: +49 (0)6432 / 9181-0
Fax: +49 (0)6432 / 9181-81
Mail: mail@emw.de
Web: www.emw.de

1.5) INSTALLATION

The filter unit must be mandatory connected with **at least one** suitable potential equalisation device and for usage in ATEX zones 0 or 20 with **at least two** suitable, independently working and not self-detachable **potential equalisation devices**. All conductive components and all parts, through which discharge can occur, must be interconnected and grounded.

Some filters are supplied with **two separately added potential equalisation devices** consisting of:

- 2 pz. grounding cable with eyelets at the cable ends
- 2 pz. screw for fixing the potential equalization device on the filter
- 2 pz. star washer externally toothed to be fit between eyelet and filter frame

Please attach the required number of potential equalisation devices to **suitable attachment points** on the filter frame. The screw is inserted through the eyelet and the washer and screwed at an attachment point on the filter frame as shown below.

It is possible to renounce on the installation of the added potential equalisation devices **only** if a safe potential compensation is guaranteed at all time by a suitable filter fastening device of the air-handling system. If in doubt, this is to check by a qualified person by using an appropriate measuring device (eg. multimeter).

Maximum torque of the screw: **0.5 Nm**

Possible attachement points

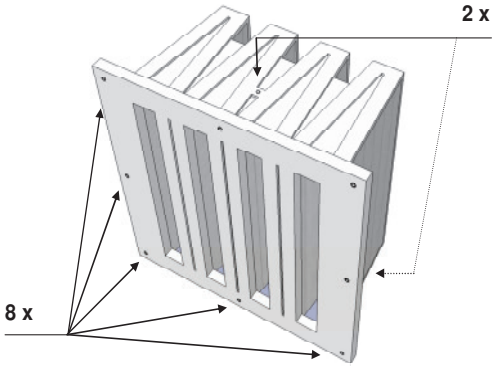

Mounting of the potential equalisation devices

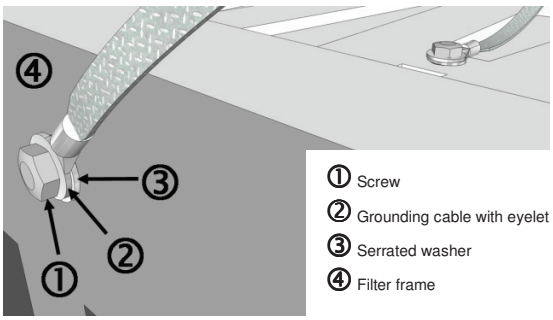

Proper mounting of suitable potential equalisation devices and **periodic monitoring** of the potential compensation must be ensured **by the user** of the filter unit.

The ambient temperature range differs from the standard ambient temperature range and is -40°C ≤ Ta ≤+80°C

1.5.1) MOUNTING AND ASSEMBLY

The filter element can be operated in either vertical or horizontal position.

Please note:

- vertical position of filter element: the throughput openings should be positioned vertically
- horizontal position of filter element: the position of the throughput openings is irrelevant

2) MAINTENANCE

Observe the following precautionary measures when carrying out maintenance:

When removing or changing the filter, the unit must be FREE OF VOLTAGE.

EMW filtertechnik GmbH
Werner-von-Siemens-Strasse 7-9/13
D-65582 Diez / Germany

Kontakt:
Tel.: +49 (0)6432 / 9181-0
Fax: +49 (0)6432 / 9181-81
Mail: mail@emw.de
Web: www.emw.de

A.5 Anti-frost thermostat

Name	Data
Designation	Anti-frost thermostat
Type	ExBin-FR
Number	
Type of manual	Instruction manual
Manufacturer	Schischek

ExBin-FR Frost protection thermostat

ExBin - FR3
ExBin - FR6
ExBin - FR... -CT

Subject to change!

Electrical, explosion-proof frost protection thermostat
24 VAC/DC supply voltage, potential free relay output
EC type-approved in acc. with ATEX directive 2014/34/EU for zone 1, 2, 21, 22

Compact. Easy installation. Universal. Cost effective. Safe.

Type	Capillary length	Supply	Output	Max. ratings	Wiring diagram
ExBin- FR3	3 m	24 VAC/DC	Relay contact	250 VAC, 0.1 A / 30 V, 0.5 A	SB 1.0
ExBin- FR6	6 m	24 VAC/DC	Relay contact	250 VAC, 0.1 A / 30 V, 0.5 A	SB 1.0
ExBin- FR... - CT	Types as above with aluminium housing and seawater resistant coating				
	(sensor connection and cable glands brass nickel-plated, screws in stainless steel)				

Product views and applications

Frost protection thermostat

...Bin-FR...-CT

Description

The ExBin-FR... frost protection thermostat is a revolution in HVAC systems, in chemical, pharmaceutical, industrial and offshore/onshore plants, for use in hazardous areas zone 1, 2 (gas) and zone 21, 22 (dust).
Highest protection class (ATEX) and IP66 protection, small dimensions, universal functions and technical data guarantee safe operation even under difficult environmental conditions.
All frost protection thermostats are programmable on site without any additional tools. The switching point is scalable within the maximum ranges.

Highlights

- For all types of gases, mists, vapours and dust for use in zone 1, 2, 21 and 22
- Power supply 24 VAC/DC
- Output potential free switching contact
- Integrated Ex-e terminal box
- No addional Ex-i module required
- No intrinsically safe wiring/installation between panel and sensor required
- No intrinsically safe wiring/installation and no space in the panel required
- LED switching state indication
- Compact design and small dimension
- Robust aluminium housing (optional with seawater resistant coating)
- IP66 protection

Schischek GmbH Germany, Muehlsteig 45, Gewerbegebiet Sued 5, 90579 Langenzenn, Tel. +49 9101 9081-0, Fax +49 9101 9081-77, E-Mail info-de@schischek.com

Technical data	ExBin	...-FR3	...-FR6
Supply voltage, frequency	24 VAC/DC ±20 % (19,2...28,8 VAC/DC), 50/60 Hz		
Current, power consumption	150 mA, ~ 4 W, internal fuse 500 mAT, not removable		
Galvanic isolation	Supply for relay output min. 1,5 kV		
Electrical connection	Terminals 0,14...2,5 mm² at integrated Ex-e terminal box, stripping length 9 mm, torque 0,4...0,5 Nm, equipotential bonding 4 mm²		
Cable glands	2 × M16 × 1,5 mm, Ex-e approved, for cable diameter ~ Ø 5...9 mm		
...-CT	2 × M16 × 1,5 mm, Ex-e approved, brass nickel-plated, for cable diameter ~ Ø 6...10 mm		
Control elements	Rotary control for setpoint adjustment and fixing screw		
Measuring range	Setpoint adjustable −10 °C...+15 °C		
Status indication	via LEDs – GREEN: ambient temperature is above setpoint (normal), RED: ambient temperature is below setpoint		
Housing material	Aluminium die-cast housing, coated. Optional with seawater resistant coating (...-CT)		
Dimensions (L × B × H)	~ 180 × 107 × 66 mm (without connectors)		
Weight	~ 950 g		
Ambient temperature	−20...+50 °C, capillary max. +80 °C, storage temperature −35...+70 °C		
Temperature class	T6 (T80 °C) bei −20...+50 °C		
Ambient humidity	0...95 % rH, non condensing		
Sensor circuit	Internal intrinsically safe (IS) circuit		
Capillary **Length**		3 m ±15 cm	6 m ±20 cm
min. active length	~ 40 cm		
min. bending radius	2 cm		
Hysteresis	~ 6 K, accurancy of setpoints ±3 K		
Start delay	5 s		
Output	Potential free switching contact – breaking contact		
max. rating load	0,5 A (30 VAC/DC) – 0,1 A (250 VAC) – 0,1 A (220 VDC)		
min. rating load	10 mW / 0,1 V / 1 mA		
Duration of life **mechanical**	10×10^6		
electrical (rated load)	100×10^3		
Wiring diagram	SB 1.0		
Scope of delivery	Frost protection thermostat, self-tapping screws 4,2 × 13 mm resp. in stainless steel (with ...CT versions)		

Approbationen

ATEX directive	2014/34/EU
EC type-approved	EPS 14 ATEX 1 657
IECEx certified	IECEx EPS 14.0074
Approval for gas	II 2 (1) G Ex e mb [ia Ga] IIC T6 Gb
Types ...-CT	II 2 (1) G Ex e mb [ia Ga] IIB T6 Gb
Approval for dust	II 2 (1) D Ex tb [ia Da] IIIC T80°C Db IP66
CE identification	CE № 0158
EMC directive	2014/30/EU
Enclosure protection	IP66 in acc. with EN 60529
EAC	TC RU C-DE.ГБ08.В.01510

Accessories

MKR	Mounting bracket for round ducts up to Ø 600 mm
Installation Kit 1.3	Assembly cramp and 4 assembly brackets for ...Bin-FR3
Installation Kit 1.6	Assembly cramp and 8 assembly brackets for ...Bin-FR6

Dimensions [mm]

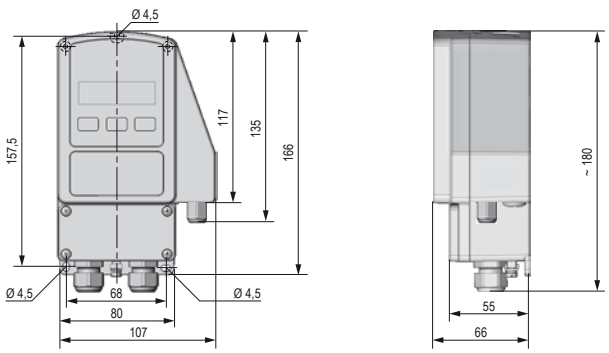

Schischek GmbH Germany, Muehlsteig 45, Gewerbegebiet Sued 5, 90579 Langenzenn, Tel. +49 9101 9081-0, Fax +49 9101 9081-77, E-Mail info-de@schischek.com

Electrical connection

All frost protection thermostats require a 24 VAC/DC power supply. The electrical wiring must be realized via the integrated Ex-e terminal box acc. to ATEX. The terminals' type of protection is "Increased safety Ex-e".
Attention: Before opening the terminal box cover, the supply voltage must be shut off ! The supply has to be connected at terminals 1 (−/~) and 2 (+/~).

At different relay and supply voltages (24 VAC/DC) the cable installation must be considered (see "Information for Installation") !

ExBin-FR... SB 1.0

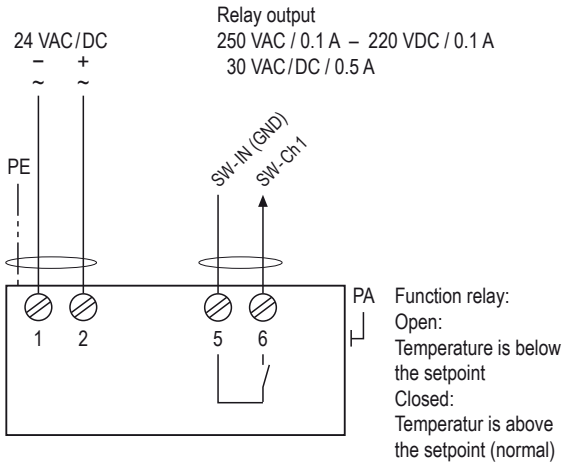

Intrinsically safe parameters (IS) – Internal contact

U_o = 7.14 V $C_i \rightarrow 0$
I_o = 8 mA $L_i \rightarrow 0$
P_o = 15 mW

	IIC	IIB	IIA
L_o	5 mH	10 mH	20 mH
C_o	1.5 µF	6.7 µF	8.6 µF

Control elements with status indication

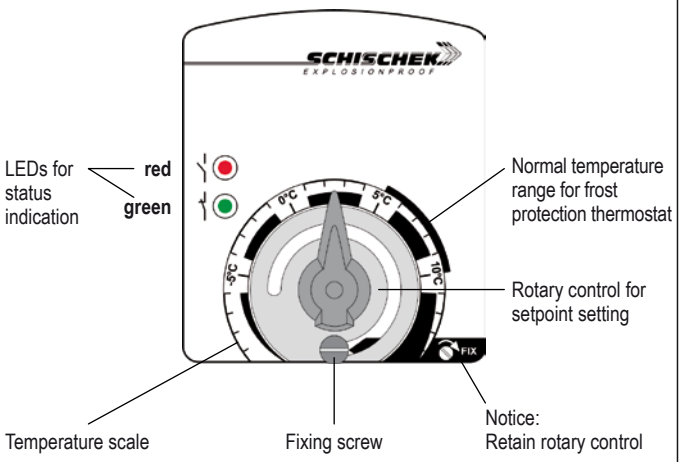

A. Installation, commissioning, maintenance

All national and international standards, rules and regulations must be complied with. Certified apparatus must be installed in accordance with manufacturer instructions. If the equipment is used in a manner not specified by the manufacturer, the safety protection provided by the equipment may be impaired. For electrical installations design, selection and erection, EN/IEC 60079-14 can be used.

Attention: Apply all Ex rules and regulation before opening the internal terminal box. Do not open cover when circuits are live!

Draw the wiring cables through the cable glands. For connection use the internal Ex-e approved terminal box and connect equipotential bonding.
After connection install the cables in a fixed position and protect them against mechanical and thermical damage. Close all openings and ensure IP protection (min. IP66).
Avoid temperature transfer and ensure not to exceed max. ambient temperature! For outdoor installation a protective shield against sun, rain and snow should be applied.
Sensors are maintenance free. An annual inspection is recommended. For electrical installations inspection and maintenance, EN/IEC 60079-17 can be used.
Clean with damp cloth only.
Ex sensors must not be opened and repaired by the end user.

B. Long cabling

We recommend using shielded signal wires and to connect one end of the shield to the ...Bin-... terminal box.

C. Separate ground wires

For supply and signal wires use separate grounds.

D. Relay output

Wires for safety extra-low voltage must be installed separately from other circuits. At 24 VAC/DC only supply and signal wires are permitted in one cable, in all other cases use separate or double isolated cables. An over-current protection fuse < 10 A has to be provided by the installer.

Installation

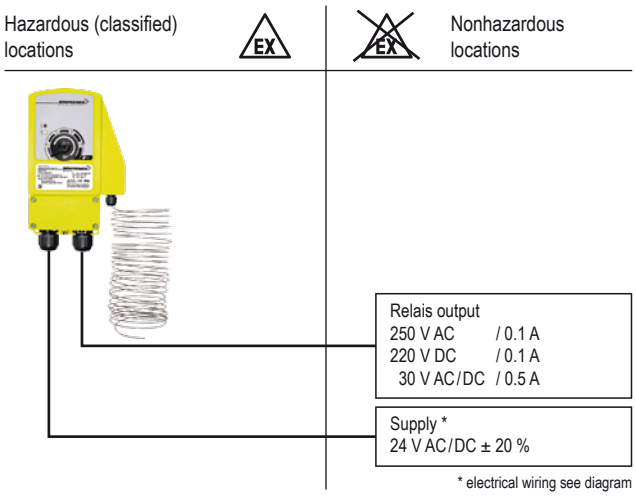

- Do not crack the capillary, note capillary's bending radius

Schischek GmbH Germany, Muehlsteig 45, Gewerbegebiet Sued 5, 90579 Langenzenn, Tel. +49 9101 9081-0, Fax +49 9101 9081-77, E-Mail info-de@schischek.com

A.6 Pressure switch/Differential pressure switch

Name	Data
Designation	Pressure switch/Differential pressure switch
Type	ExBin-P
Number	
Type of manual	Instruction manual
Manufacturer	Schischek

ExBin-P Pressure switches 5 Pa ... 5.000 Pa

ExBin - P- ...
ExBin - P- ... - 2
ExBin - ... - CT
ExBin - ... - OCT
ExBin - ... - VA
ExBin - ... - OVA

Subject to change!

Electrical, explosion-proof binary pressure / differential pressure switches
5 Pa...100 Pa with adjustable switch activation delay
24 VAC/DC supply voltage, output potential free switching contact
EC type-approved in acc. with ATEX directive 2014/34/EU for zone 1, 2, 21, 22

Compact. Easy installation. Universal. Cost effective. Safe.

Type	Switch	Supply	Range	min. Setting	max. Pressure	Activation delay	Output switch	Wiring diagram
ExBin- P- 100	Pressure	24 VAC/DC	0... 100 Pa	5 Pa	5.000 Pa	0...240 s	potential free contact	SB 1.0
ExBin- P- 500	Pressure	24 VAC/DC	0... 500 Pa	25 Pa	5.000 Pa	–	potential free contact	SB 1.0
ExBin- P-5000	Pressure	24 VAC/DC	0...5.000 Pa	250 Pa	50.000 Pa	–	potential free contact	SB 1.0
ExBin- P- ... - 2	Types **...P-500 und ...P-5000** as above with additional switching output						2 × potential free contact	SB 1.0
ExBin- P- ... - CT	Types as above with aluminium housing and seawater resistant coating (cable glands M16 brass nickel-plated, screws in stainless steel)							
ExBin- P- ... - OCT	Types as above, offshore version with aluminium housing and seawater resistant coating (stainless steel tubes for clamping ring connection, cable glands M20 brass nickel-plated, screws in stainless steel)							
ExBin- P- ... - VA	Types as above with stainless steel housing for aggressive ambient (cable glands M20 brass nickel-plated, screws in stainless steel)							
ExBin- P- ... - OVA	Types as above, offshore version with stainless steel housing for aggressive ambient (tubes for clamping ring connection and screws in stainless steel, cable glands M20 brass nickel-plated)							

Product views and applications

Figures ...Bin-P-...-2

Pressure / Diff. press. switch

...Bin-P...-CT

...Bin-P...-VA

Offshore ...-OCT

Offshore ...-OVA

Description

The ExBin-P-... pressure switch generation from 5...5000 Pa (acc. to type) is a revolution for differential pressure switches in HVAC systems, in chemical, pharmaceutical, industrial and offshore / onshore plants, for use in hazardous areas zone 1, 2 (gas) and zone 21, 22 (dust).
Highest protection class (ATEX) and IP66 protection, small dimensions, universal functions and technical data guarantee safe operation even under difficult environmental conditions.
All pressure switches are programmable on site without any additional tools. The switching points are scalable within the maximum ranges. The integrated display is for parametrisation and an actual value indication at working mode (can be switched off as needed).
...Bin-P-...-2 sensors are equipped with an additional switching output (2-stage), which can be parametrised independently.
...Bin-P-...-OCT and **...-OVA** offshore versions are equipped with stainless steel tubing Ø 6 mm.

Highlights

- ▶ For all types of gases, mists, vapours and dust for use in zone 1, 2, 21 and 22
- ▶ Power supply 24 VAC / DC
- ▶ Potential free switching contact output
- ▶ Adjustable switching threshold, hysteresis and start-up bypass time
- ▶ Adjustable switch activation delay (acc. to type)
- ▶ Integrated Ex-e terminal box
- ▶ No addional Ex-i module required
- ▶ No intrinsically safe wiring / installation between panel and sensor required
- ▶ No intrinsically safe wiring / installation and no space in the panel required
- ▶ Optional second switching output (acc. to type)
- ▶ Display with backlight, can be switched off
- ▶ Password locking
- ▶ Down to −20 °C ambient temperature applicable
- ▶ Compact design and small dimension
- ▶ Robust aluminium housing (optional with seawater resistant coating) or in stainless steel
- ▶ IP66 protection
- ▶ Offshore versions with pressure tube connection for clamping ring Ø 6 mm

Schischek GmbH Germany, Muehlsteig 45, Gewerbegebiet Sued 5, 90579 Langenzenn, Tel. +49 9101 9081-0, Fax +49 9101 9081-77, E-Mail info-de@schischek.com

Technical data	...-P-100	...-P-500	...-P-5000
Supply voltage, frequency	24 VAC/DC ±20 % (19,2...28,8 VAC/DC), 50/60 Hz		
Current, power consumption	150 mA, ~ 4 W, internal fuse 500 mAT, without bracket, not removable		
Galvanic isolation	Supply for relay output min. 1,5 kV		
Electrical connection	Terminals 0,14...2,5 mm² at integrated Ex-e terminal box, stripping length 9 mm, torque 0,4...0,5 Nm, equipotential bonding 4 mm²		
Cable glands	2 × M16 × 1,5 mm, Ex-e approved, for cable diameter ~ Ø 5...9 mm		
Cable glands ...-CT	2 × M16 × 1,5 mm, Ex-e approved, brass nickel-plated, for cable diameter ~ Ø 6...10 mm		
...-VA, ...-OCT, ...-OVA	2 × M20 × 1,5 mm, Ex-e approved, brass nickel-plated, for cable diameter ~ Ø 6...13 mm		
Protection class	Class I (grounded)		
Display	LC-Display, backlit, for configuration, user guidance, parameter and actual value indication. Status indicator via LEDs		
Control elements	3 buttons for configuration		
Housing material	Aluminium die-cast housing, coated. Optional with seawater resistant coating (...-CT/...-OCT) or stainless steel housing,		
	№ 1.4581 / UNS-J92900 / similar AISI 316Nb (...-VA/...-OVA)		
Dimensions (L × W × H)	Aluminium housing ~ 180 × 107 × 66 mm, stainless steel housing ~ 195 × 127 × 70 mm (each without connectors)		
Weight	~ 950 g aluminium housing, stainless steel version ~ 2,5 kg		
Ambient temperature	−20...+50 °C, storage temperature −35...+70 °C		
Temperature class	Aluminium housing T6 (T80 °C) at −20...+50 °C		
	Stainless steel housing T5 (T95 °C) at −20...+40 °C, T4 (T130 °C) at −20...+50 °C		
Ambient humidity	0...95 % rH, non condensing		
Sensor circuit	Internal intrinsically safe (IS) circuit		
Sensor	Piezo pressure transmitter, installation in Ex zone		
Pressure connection	P+ / P− sleeves Ø 4...6 mm. OCT versions have 2 stainless steel (316L) tube connections for clamp ring fittings Ø 6 mm		
Measuring range	0...100 Pa	0...500 Pa	0...5000 Pa
	Minimum measuring range is 5 % of full range (e.g. 25 Pa at ...500 Pa switch)		
Response time of sensor	T90 / 5 s		
Accuracy of pressure	< ±1 % typically, max. ±5 % of end value ±1 Pa		
Setting range hysteresis	0,1...10 Pa (factory setting 2 Pa)	0,5...50 Pa (factory setting 10 Pa)	5...500 Pa (factory setting 100 Pa)
Start delay	5 s		
Start-up bypass time (AUB)	3...240 s (factory setting 120 s)		
Switch activation delay	0...240 s (factory setting 0 s / Off)	–	–
Setting zero point	Via menu. Short-circuit mechanically both tube connectors P+ / P− for the moment of zero point setting		
Output	Potential free switching contact – breaking/making contact, adjustable per menu		
	max. rating load: 0,5 A (30 VAC/DC) – 0,1 A (250 VAC) – 0,1 A (220 VDC); min. rating load: 10 mW / 0,1 V / 1 mA		
Additional relay output (type ...-2)	–	as above	as above
Duration of life Mechanical	10×10^6		
Electrical (rated load)	100×10^3		
Wiring diagram	SB 1.0		
Scope of delivery	Pressure switch, 3 self-tapping screws 4,2 × 13 mm resp. in stainless steel (with ...CT and ...VA versions), short circuit tube		

Approbations

ATEX directive	2014/34/EU
EC type-approved	EPS 14 ATEX 1 657
IECEx certified	IECEx EPS 14.0074
Approval for gas	II 2 (1) G Ex e mb [ia Ga] IIC T6...T4 Gb
Types ...-CT, ...-OCT	II 2 (1) G Ex e mb [ia Ga] IIB T6 Gb
Approval for dust	II 2 (1) D Ex tb [ia Da] IIIC T80°C...T130°C Db IP66
CE identification	CE № 0158
EMC directive	2014/30/EU
Enclosure protection	IP66 in acc. with EN 60529
EAC	TC RU C-DE.ГБ08.В.01510

Special solutions and accessories

...-CT	Types in aluminium housing with seawater resistant coating, parts nickel-plated
...-OCT	Offshore version in aluminium housing with seawater resistant coating, parts nickel-plated
...-VA	Types in stainless steel housing, parts nickel-plated
...-OVA	Offshore version in stainless steel housing, parts nickel-plated
MKR	Mounting bracket for round ducts up to Ø 600 mm
Kit 2	Flexible pressure tube, 2 m, inner Ø 6 mm, 2 connection nipples
Kit-S8-CBR	2 cable glands M16 × 1.5 mm, Ex-e, brass nickel-plated, for cable Ø 5...10 mm
Kit-Offs-GL-CBR	2 cable glands M20 × 1.5 mm, Ex-d, Ms-Ni, for armoured cables
Kit-PTC-CBR	2 connecting tubes for tube fittings Ø 6 mm, stainless steel 316 L

Schischek GmbH Germany, Muehlsteig 45, Gewerbegebiet Sued 5, 90579 Langenzenn, Tel. +49 9101 9081-0, Fax +49 9101 9081-77, E-Mail info-de@schischek.com

Electrical connection

All pressure switches require a 24 VAC/DC power supply. The electrical wiring must be realized via the integrated Ex-e terminal box acc. to ATEX. The terminals' type of protection is "Increased safety Ex-e".
Attention: Before opening the terminal box cover, the supply voltage must be shut off!
The supply has to be connected at terminals 1 (−/~) and 2 (+/~).
The start-up bypass delay (AUB) can be activated by bridging terminals 2–3. Activation is indicated by a flashing green LED.

At different relay and supply voltages (24 VAC/DC) the cable installation must be considered (see "Information for Installation") !

ExBin-P-... **SB 1.0**

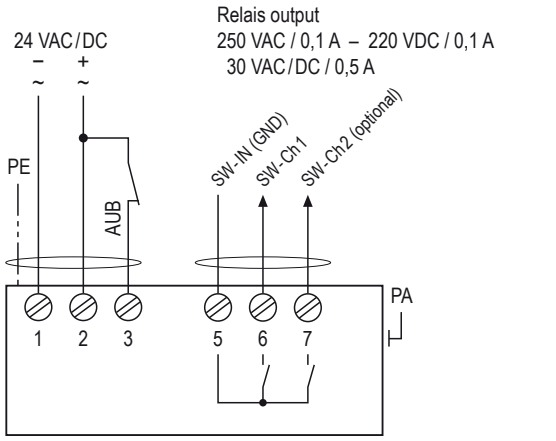

Switching function normally open or closed can be selected via menu only.

Zero point compensation

...Bin-P-... pressure switches are equipped with a zero point compensation to adjust the module to the installation position. The pressure nipples P+ / P− must be connected with a short circuit tube and the zero point compensation performed by following the menu for parametrisation (menu 14).
Before starting the zero point compensation, the device should be connected to power supply for a minimum of 15 minutes to reach the uniform working temperature!

Display, buttons and parameters

Fig. ...Bin-P-2

Change operation – parametrisation mode
To change from operation to parametrisation mode and vice versa, push ↵ ENTER button for minimum of 3 seconds. Back to operation mode with menu "save".

Indication of data logging
A flashing unit symbol (star) in the display shows that data is received and the device is working.

Password input
The default/delivery setup is 0000. In this configuration the password input is not activated. To activate the password protection (menu 15) change the 4 digits into your choosen numbers (e.g. 1234) and press ENTER.
Please keep your password in mind for next parameter change! Due to a new parameter setup the password is requested.

Important information for installation and operation

A. Installation, commissioning, maintenance

All national and international standards, rules and regulations must be complied with. Certified apparatus must be installed in accordance with manufacturer instructions.
If the equipment is used in a manner not specified by the manufacturer, the safety protection provided by the equipment may be impaired. For electrical installations design, selection and erection, EN/IEC 60079-14 can be used.

Attention: Apply all Ex rules and regulation before opening the internal terminal box. Do not open cover when circuits are live!

Draw the wiring cables through the cable glands. For connection use the internal Ex-e approved terminal box and connect equipotential bonding.
After connection install the cables in a fixed position and protect them against mechanical and thermical damage. Close all openings and ensure IP protection (min. IP66).
Avoid temperature transfer and ensure not to exceed max. ambient temperature! For outdoor installation a protective shield against sun, rain and snow should be applied.
After mounting and installation a zero point compensation must be done to ensure correct measurement results (see description).
Sensors are maintenance free. An annual inspection is recommended. For electrical installations inspection and maintenance, EN/IEC 60079-17 can be used.
Clean with damp cloth only.
Ex sensors must not be opened and repaired by the end user.

B. Long cabling

We recommend using shielded signal wires and to connect one end of the shield to the ...Bin-... terminal box.

C. Separate ground wires

For supply and signal wires use separate grounds.

D. Relais output

Wires for safety extra-low voltage must be installed separately from other circuits. At 24 VAC/DC only supply and signal wires are permitted in one cable, in all other cases use separate or double isolated cables. An over-current protection fuse < 10 A has to be provided by the installer.

Schischek GmbH Germany, Muehlsteig 45, Gewerbegebiet Sued 5, 90579 Langenzenn, Tel. +49 9101 9081-0, Fax +49 9101 9081-77, E-Mail info-de@schischek.com

Dimensions [mm]

Aluminium housing

...Bin-P...-OCT

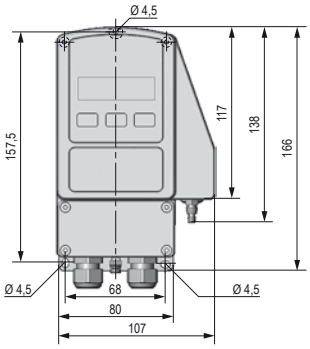

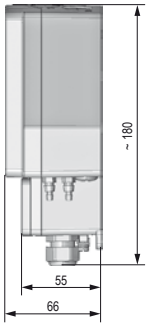

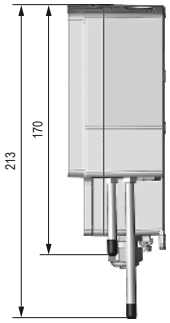

Stainless steel housing

...Bin-P...-OVA

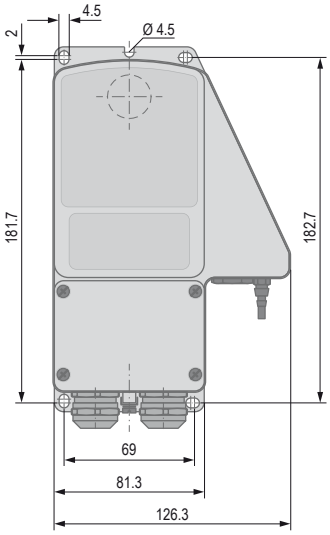

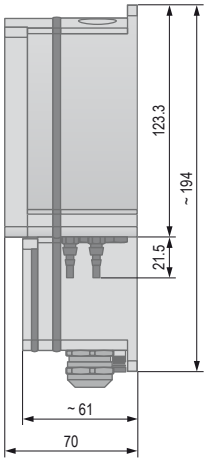

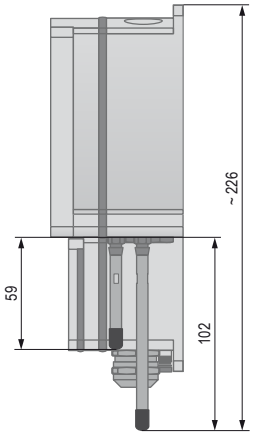

Parametrisation and commissioning

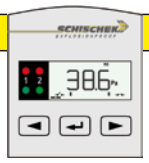

To change from operation to parametrisation mode push the "ENTER" button ↵ for minimum 3 seconds. If password protected: type password and push ↵. Skip menu with ►, back to operation mode with menu "save".

Operation → Parametrisation
push ↵ for min. 3 s

Menu	Function	ENTER	Indication	Select	ENTER	Next indication	Select	ENTER	Next menu
Menu 1	**Preset** Select application	PSEt	PRO	◄ ► FAN, FILT, PRO	↵				►
Menu 2	**Unit sensor** Select physical unit	Unit	Pa	◄ ► Pa, mbar, inH_2O	↵				►
Menu 3	**set 1** Select switching point 1	SEt 1	100.0 Pa	◄ ► enter setpoint	↵				►
Menu 4	**set 2 (optional) *** Select switching point 2	SEt2	400.0 Pa	◄ ► enter setpoint	↵				►
Menu 5	**hysteresis **** Select hysteresis	HYSt	10.0 Pa	◄ ► enter hysteresis	↵				►
Menu 6	**mode **** Select switching properties (break contact, make contact)	ModE	UP	◄ ► Up, Down, Mid *	↵	NC	◄ ► nc, no	↵	►
Menu 7	no function – menu skip								

Continue next page

Schischek GmbH Germany, Muehlsteig 45, Gewerbegebiet Sued 5, 90579 Langenzenn, Tel. +49 9101 9081-0, Fax +49 9101 9081-77, E-Mail info-de@schischek.com

Continue Parametrisation

Menu	Function	ENTER	Indication	Select	ENTER	Next indication	Select	ENTER	Next menu
Menu 8	no function – menu skip								
Menu 9	no function – menu skip								
Menu 10	no function – menu skip								
Menu 11	no function – menu skip								
Menu 12	**time** Select bypass (AUB) time	tIME	100	enter seconds for AUB					►
Menu 13	**display setting** Select display	LAMP	ON	on, off					►
Menu 14	**Zero point compensation** Sensor's calibration for its installation position	0-Pt	run						
Menu 15	**security** Select password protection	SECU	0000	enter password					►
Menu 16	**save** Select: save data, discard, back to menu, factory setting	SAVE	YES	Yes, no, menu, dset (default setting)		(operation mode after "save")			

* **for ...Bin-P-...-2 only (2-stage)**
** **adjustable in professional mode only (menu 1)**

Menu 1 "pset" – Preset

For some applications you can select presetting to ease parametrisation. Besides fan belt („FAN") and filter monitoring („FILT") the professional mode („PRO") is available for further applications.

Professional mode

Menu 1 PRO

When this mode is selected the switching properties can be set at will per menu 5 ("hysteresis") and 6 ("mode") acc. to requirements.

Fan speed monitoring

Menu 1 FAN

The preset "FAN" hides menu 5 ("hysteresis") and 6 ("mode") during parametrisation. The corresponding values are set automaticly.

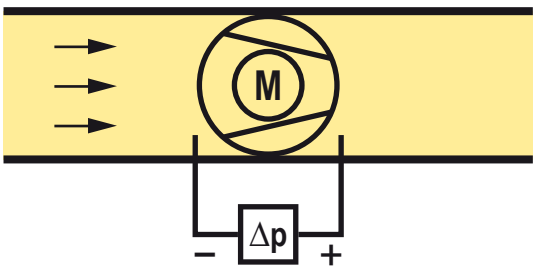

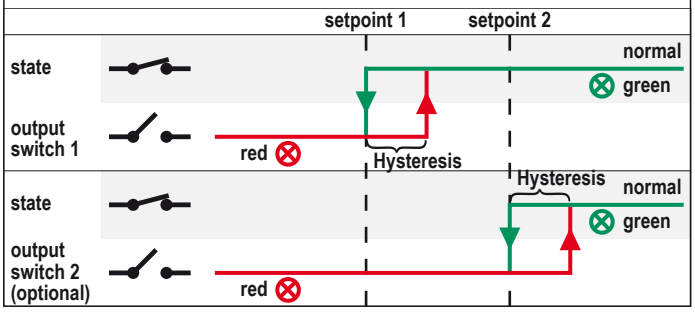

Filter monitoring

Menu 1 FILt

The preset "FILT" hides menu 5 ("hysteresis") and 6 ("mode") during parametrisation. The corresponding values are set automaticly.

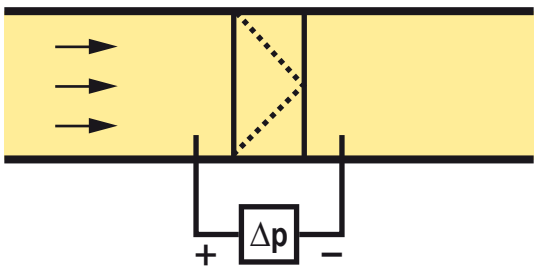

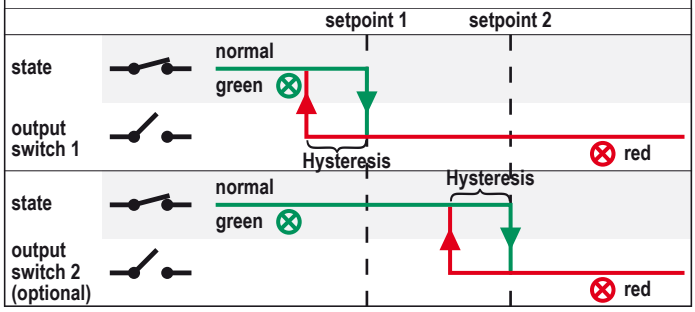

Schischek GmbH Germany, Muehlsteig 45, Gewerbegebiet Sued 5, 90579 Langenzenn, Tel. +49 9101 9081-0, Fax +49 9101 9081-77, E-Mail info-de@schischek.com

Menu 6 “mode” – Switching properties

1. Define the device’s normal range first:
   The device should indicate (green LED) when the temperature/humidity is
   - above the setpoints – mode „up-range“ has to be selected.
   - under the setpoints – mode „down-range“ has to be selected.
   - between the setpoints – mode „mid-range“ has to be selected.
     This mode is available for 2-stage devices only (...Bin-P...-2).

2. Select the switching charateristic of the output relay:
   When the measured value is in normal range, the corresponding relays shall
   - close – select “normally closed” (nc)
   - open – select “normally open” (no)

„UP range“ – „Normally Closed“ (nc)
Normal range **above** setpoint – switch is **closed**

The switch opens when the set value is underrun.

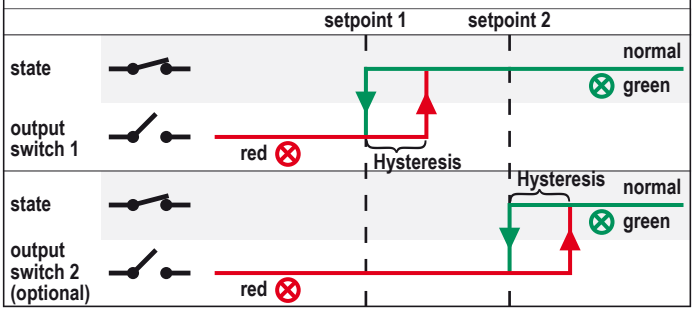

„UP range“ – „Normally Open“ (no)
Normal range **above** setpoint – switch is **open**

The switch closes when the set value is underrun.

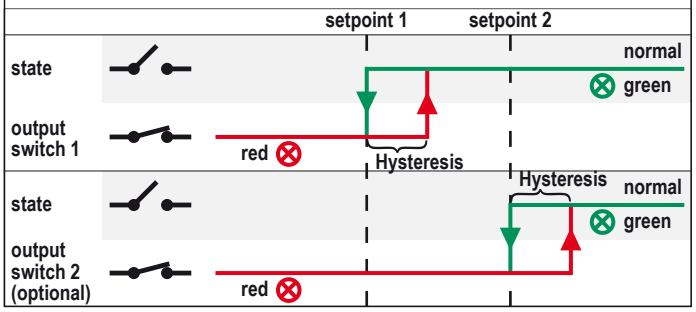

„Down range“ – „Normally Closed“ (nc)
Normal range **below** setpoint – switch is **closed**

The switch opens when the set value is underrun.

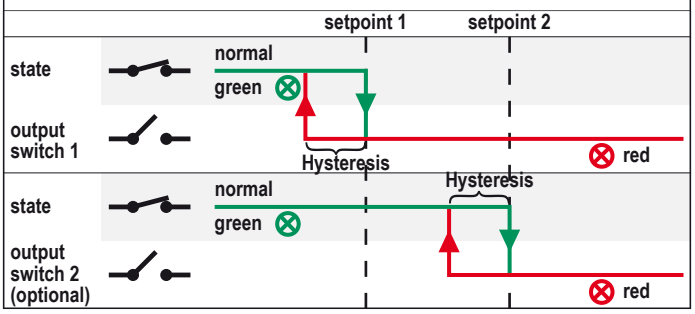

„Down range“ – „Normally Open“ (no)
Normal range **below** setpoint – switch is **open**

The switch closes when the set value is underrun.

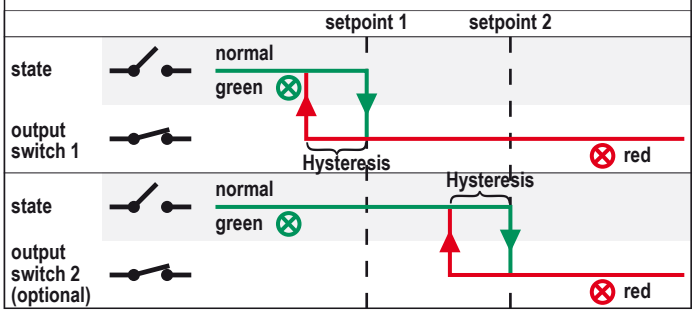

„Mid range“ – „Normally Closed“ (nc)
Normal range **between** setpoints – switch is **closed**

2-stage devices only

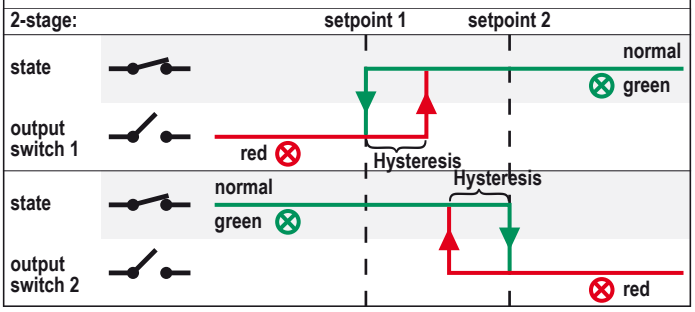

„Mid range“ – „Normally Open“ (no)
Normal range **between** setpoints – switch is **open**

2-stage devices only

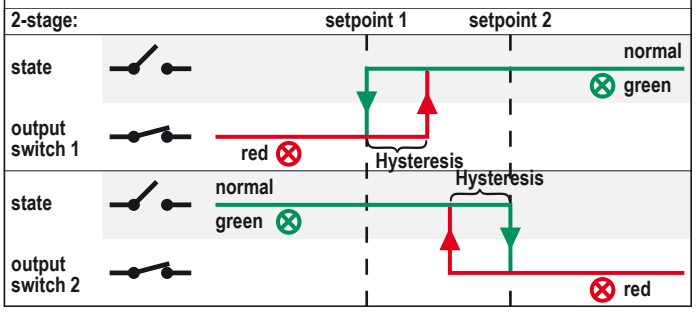

Schischek GmbH Germany, Muehlsteig 45, Gewerbegebiet Sued 5, 90579 Langenzenn, Tel. +49 9101 9081-0, Fax +49 9101 9081-77, E-Mail info-de@schischek.com

A.7 Pressure sensors

Name	Data
Designation	Pressure sensors
Type	ExCos-P
Number	
Type of manual	Instruction manual
Manufacturer	Schischek

ExCos-P Pressure sensor 20 Pa ... 7.500 Pa

ExCos - P- ...
ExCos - P- ... - A
ExCos - ... - CT
ExCos - ... - OCT
ExCos - ... - VA
ExCos - ... - OVA

Subject to change!

Electrical, explosion-proof pressure / differential pressure sensors
24 VAC/DC supply voltage, 0...10 V / (0)4...20 mA analogue output
EC type-approved in acc. with ATEX directive 2014/34/EU for zone 1, 2, 21, 22

Compact. Easy installation. Universal. Cost effective. Safe.

Type	Sensor	Supply	Range	min. Setting	max. Pressure	Output	Ex-i output	Wiring diagram
ExCos- P- 100	Pressure / Diff. press.	24 VAC/DC	± 100 Pa	20 Pa	25.000 Pa	(0)4...20 mA / 0...10 V	–	SB 1.0
ExCos- P- 250	Pressure / Diff. press.	24 VAC/DC	± 250 Pa	50 Pa	25.000 Pa	(0)4...20 mA / 0...10 V	–	SB 1.0
ExCos- P- 500	Pressure / Diff. press.	24 VAC/DC	± 500 Pa	100 Pa	50.000 Pa	(0)4...20 mA / 0...10 V	–	SB 1.0
ExCos- P-1250	Pressure / Diff. press.	24 VAC/DC	± 1.250 Pa	250 Pa	50.000 Pa	(0)4...20 mA / 0...10 V	–	SB 1.0
ExCos- P-2500	Pressure / Diff. press.	24 VAC/DC	± 2.500 Pa	500 Pa	50.000 Pa	(0)4...20 mA / 0...10 V	–	SB 1.0
ExCos- P-5000	Pressure / Diff. press.	24 VAC/DC	± 5.000 Pa	1.000 Pa	75.000 Pa	(0)4...20 mA / 0...10 V	–	SB 1.0
ExCos- P-7500	Pressure / Diff. press.	24 VAC/DC	± 7.500 Pa	1.500 Pa	120.000 Pa	(0)4...20 mA / 0...10 V	–	SB 1.0
ExCos- P- ... - A	Types as above with additional intrinsically safe analogue output to connect an external digital indicator						(0)4…20 mA	SB 3.1
ExCos- P- ... - CT	Types as above with aluminium housing and seawater resistant coating (cable glands M16 brass nickel-plated, screws in stainless steel)							
ExCos- P- ... - OCT	Types as above, offshore version with aluminium housing and seawater resistant coating (stainless steel tubes for clamping ring connection, cable glands M20 brass nickel-plated, screws in stainless steel)							
ExCos- P- ... - VA	Types as above with stainless steel housing for aggressive ambient (cable glands M20 brass nickel-plated, screws in stainless steel)							
ExCos- P- ... - OVA	Types as above, offshore version with stainless steel housing for aggressive ambient (tubes for clamping ring connection and screws in stainless steel, cable glands M20 brass nickel-plated)							

Product views and applications

Pressure / Differential press.

...Cos-P...-CT

...Cos-P...-VA

Offshore ...-OCT

Offshore ...-OVA

Description

The ExCos-P-... pressure sensor generation from ±100 Pa to ±7.500 Pa (acc. to type) is a revolution for differential pressure measuring in HVAC systems, in chemical, pharmaceutical, industrial and offshore / onshore plants, for use in hazardous areas zone 1, 2 (gas) and zone 21, 22 (dust).
Highest protection class (ATEX) and IP66 protection, small dimensions, universal functions and technical data guarantee safe operation even under difficult environmental conditions.
All sensors are programmable on site without any additional tools. The measuring ranges are scalable within the maximum ranges. At ...Cos-P-100 the smallest ΔP range is 20 Pa. The analogue output signal is either 0...10 VDC or (0)4...20 mA and can be selected on site. The integrated display is for parametrisation and an actual value indication at working mode (can be switched off as needed).
...Cos-P-...-A sensors are equipped with an additional intrinsically safe (IS) output, e.g. for an external indicator.
...Cos-P-...-OCT and **...-OVA** offshore versions are equipped with stainless steel tubing Ø 6 mm.

Highlights

- ▶ For all types of gases, mists, vapours and dust for use in zone 1, 2, 21 and 22
- ▶ Power supply 24 VAC / DC
- ▶ Scalable analogue output, selectable 0…10 V / (0)4…20 mA
- ▶ Integrated Ex-e terminal box
- ▶ No addional Ex-i module required
- ▶ No intrinsically safe wiring / installation between panel and sensor required
- ▶ No intrinsically safe wiring / installation and no space in the panel required
- ▶ Optional IS-output (0)4…20 mA for external indicator in Ex-areas
- ▶ Display with backlight, can be switched off
- ▶ Password locking
- ▶ Down to −20 °C ambient temperature applicable
- ▶ Compact design and small dimension
- ▶ Robust aluminium housing (optional with seawater resistant coating) or in stainless steel
- ▶ IP66 protection
- ▶ Offshore versions with pressure tube connection for clamping ring Ø 6 mm

Schischek GmbH Germany, Muehlsteig 45, Gewerbegebiet Sued 5, 90579 Langenzenn, Tel. +49 9101 9081-0, Fax +49 9101 9081-77, E-Mail info-de@schischek.com

Technical data

Supply voltage, frequency	24 VAC/DC ±20 % (19,2...28,8 VAC/DC), 50/60 Hz
Current, power consumption	150 mA, ~ 4 W, internal fuse 500 mAT, without bracket, not removable
Galvanic isolation	Supply for analogue in- and outputs min. 1,5 kV, supply for relay output min. 1,5 kV
Electrical connection	Terminals 0,14...2,5 mm² at integrated Ex-e terminal box, stripping length 9 mm, torque 0,4...0,5 Nm, equipotential bonding 4 mm²
Cable glands	2 × M16 × 1,5 mm, Ex-e approved, for cable diameter ~ Ø 5...9 mm
Cable glands ...-CT	2 × M16 × 1,5 mm, Ex-e approved, brass nickel-plated, for cable diameter ~ Ø 6...10 mm
...-VA, ...-OCT, ...-OVA	2 × M20 × 1,5 mm, Ex-e approved, brass nickel-plated, for cable diameter ~ Ø 6...13 mm
Protection class	Class I (grounded)
Display	2 × 16 digits, dot-matrix display, backlit, for configuration, user guidance, parameter and actual value indication
Control elements	3 buttons for configuration
Housing material	Aluminium die-cast housing, coated. Optional with seawater resistant coating (...-CT/...-OCT) or stainless steel housing,
	№ 1.4581 / UNS-J92900 / similar AISI 316Nb (...-VA/...-OVA)
Dimensions (L × W × H)	Aluminium housing ~ 180 × 107 × 66 mm, stainless steel housing ~ 195 × 127 × 70 mm (each without connectors)
Weight	~ 950 g aluminium housing, stainless steel version ~ 2,5 kg
Ambient temperature	−20...+50 °C, storage temperature −35...+70 °C
Temperature class	Aluminium housing T6 (T80 °C) at −20...+50 °C
	Stainless steel housing T5 (T95 °C) at −20...+40 °C, T4 (T130 °C) at −20...+50 °C
Ambient humidity	0...95 % rH, non condensing
Sensor circuit	Internal intrinsically safe (IS) circuit
Sensor	Piezo pressure transmitter
Pressure connection	P+ / P− sleeves Ø 4...6 mm. OCT versions have 2 stainless steel (316L) tube connections for clamp ring fittings Ø 6 mm
Measuring range	±100 Pa, ±250 Pa, ±500 Pa, ±1.250 Pa, ±2.500 Pa, ±5.000 Pa, ±7.500 Pa in acc. to type
	Minimum measuring range is 20 % of full range (e.g. 20 Pa at ±100 Pa sensor)
Response time of sensor	T90 / 5 s
Accuracy of pressure	< ±1 % typically, max. ±2 % of end value ±1 Pa
Non linearity and hysteresis	±0,05 % typically, max. 0,25 % of end value
Start delay	5 s
Setting zero point	Via menu. Short-circuit mechanically both tube connectors P+ / P− for the moment of zero point setting
Stability	Long term stability < 0,2 %/year, temperature influence < 0,02 %/K, supply voltage influence < 0,01 %
Output	Voltage U [V] or current I [mA], selectable on site via menu, protected against short circuit and external voltage up to 24 V and against
	polarity reversal
Voltage output U	0...10 VDC adjustable, invertible, burden > 1 kΩ, influence < 0,05 %/100 Ω
Current output I	0...20 mA adjustable, invertible, burden < 500 Ω, influence < 0,1 %/100 Ω, open circuit voltage < 24 V
Output in alarm mode	Increasing or decreasing output signal, selectable on site, down to 0 VDC/0 mA or up to 10 VDC/20 mA
Wiring diagram	SB 1.0
Scope of delivery	Sensor, 3 self-tapping screws 4,2 × 13 mm resp. in stainless steel (with ...CT and ...VA versions), short circuit tube
	Cos-P-...-A with 1 additional plug for cable Ø 6...8 mm
Parameter at delivery	min./max. pressure range limits (e.g. ExCos-P-100 = −100…+100 Pa), output 4…20 mA, output in alarm mode decreasing to 0 V/0 mA
...Cos-P-...-A	as above and 1 additional intrinsically safe analogue output
Ex-i analogue output	(0)4...20 mA, intrinsically safe (IS), burden max. 400 Ω
Accuracy	±0,5 %
Wiring diagram	SB 3.1

Approbations

ATEX directive	2014/34/EU
EC type-approved	EPS 14 ATEX 1 655 X
IECEx certified	IECEx EPS 14.0022X
Approval for gas	II 2 (1) G Ex e ma [ia Ga] IIC T6...T4 Gb
Types ...-CT, ...-OCT	II 2 (1) G Ex e ma [ia Ga] IIB T6 Gb
Approval for dust	II 2 (1) D Ex tb [ia Da] IIIC T80°C...T130°C Db IP66
CE identification	CE № 0158
EMC directive	2014/30/EU
Enclosure protection	IP66 in acc. with EN 60529
EAC	TC RU C-DE.ГБ08.В.01510

Special solutions and accessories

...-CT	Types in aluminium housing with seawater resistant coating,
	parts nickel-plated
...-OCT	Offshore version in aluminium housing with seawater resistant coating,
	parts nickel-plated
...-VA	Types in stainless steel housing, parts nickel-plated
...-OVA	Offshore version in stainless steel housing, parts nickel-plated
EXC-RIA-16	LCD indicator (IS) for Ex-/RedCos-... sensors in Ex-zones 1, 2, 21, 22
MKR	Mounting bracket for round ducts up to Ø 600 mm
Kit 2	Flexible pressure tube, 2 m, inner Ø 6 mm, 2 connection nipples
Kit-S8-CBR	2 cable glands M16 × 1.5 mm, Ex-e, brass nickel-plated, for cable Ø 5...10 mm
Kit-Offs-GL-CBR	2 cable glands M20 × 1.5 mm, Ex-d, Ms-Ni, for armoured cables
Kit-PTC-CBR	2 connecting tubes for tube fittings Ø 6 mm, stainless steel 316 L

Schischek GmbH Germany, Muehlsteig 45, Gewerbegebiet Sued 5, 90579 Langenzenn, Tel. +49 9101 9081-0, Fax +49 9101 9081-77, E-Mail info-de@schischek.com

Electrical connection

All sensors require a 24 VAC/DC power supply. The electrical wiring must be realized via the integrated Ex-e terminal box acc. to ATEX. The terminals' type of protection is "Increased safety Ex-e".
Attention: Before opening the terminal box cover, the supply voltage must be shut off!
The supply has to be connected at terminals 1 (−/~) and 2 (+/~), the analogue output at terminals 3 (mA/V) and 4 (GND).
The optional analogue output at ...Cos-P-...-A is intrinsically safe. Note the maximum connection values of intrinsically safe parameters (see table below).

ExCos-P-... SB 1.0

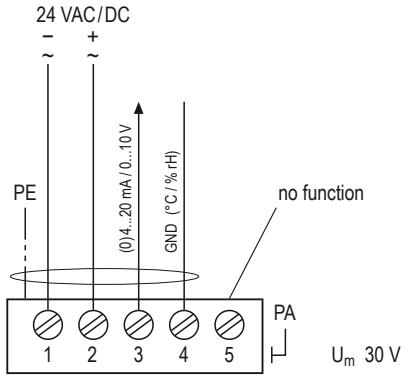

Intrinsically safe parameters (IS) – Internal pressure sensor

U_o = 7.9 V $C_i \rightarrow 0$
I_o = 48 mA $L_i \rightarrow 0$
P_o = 95 mW

	IIC	IIB	IIA
L_o	2 mH	5 mH	10 mH
C_o	1.3 µF	5.8 µF	7.1 µF

Internal sensor IS values are corresponding to the internal pressure sensor. Due to the matter of fact that there is no external sensor connected, these IS values are not relevant for the customer but shown for the sake of completeness.

Ex-i output (IS) (optional) – ExCos-P-...-A

Connector and terminals SB 3.1

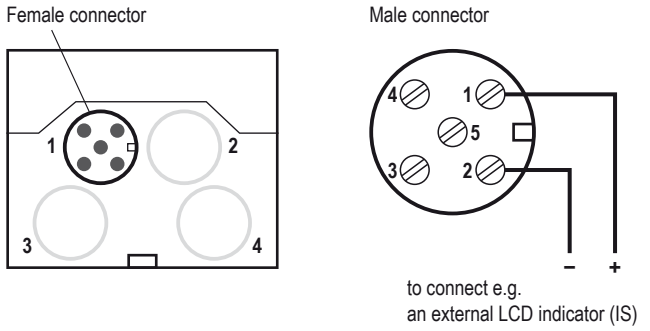

Intrinsically safe parameters (IS) – Analogue Ex-i output

U_o = 15.8 V $C_i \rightarrow 0$
I_o = 85 mA $L_i \rightarrow 0$
P_o = 336 mW

	IIC	IIB	IIA
L_o	2 mH	5 mH	10 mH
C_o	0.33 µF	1.6 µF	1.8 µF

Zero point compensation

...Cos-P-... pressure sensors are equipped with a zero point compensation to adjust the module to the installation position. The pressure nipples P+ / P− must be connected with a short circuit tube and the zero point compensation performed by following the menu for parametrisation (menu 18).
Before starting the zero point compensation, the device should be connected to power supply for a minimum of 15 minutes to reach the uniform working temperature!

Display, buttons and parameters

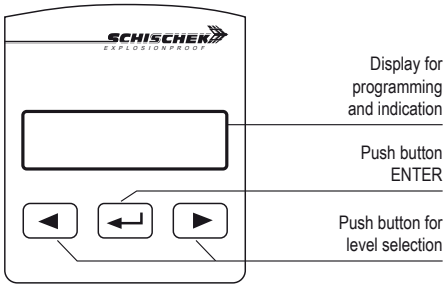

Change operation – parametrisation mode
To change from operation to parametrisation mode and vice versa, push ↵ ENTER button for minimum of 3 seconds. Back to operation mode with menu "save".

Indication of data logging
A flashing star in the display shows that data is received and the device is working.

Password input
The default/delivery setup is 0000. In this configuration the password input is not activated. To activate the password protection (menu 20) change the 4 digits into your choosen numbers (e.g. 1234) and press ENTER.
Please keep your password in mind for next parameter change! Due to a new parameter setup the password is requested.

Important information for installation and operation

A. Installation, commissioning, maintenance
All national and international standards, rules and regulations must be complied with. Certified apparatus must be installed in accordance with manufacturer instructions.
If the equipment is used in a manner not specified by the manufacturer, the safety protection provided by the equipment may be impaired. For electrical installations design, selection and erection, EN/IEC 60079-14 can be used.

⚠ **Attention:** Apply all Ex rules and regulation before opening the internal terminal box. Do not open cover when circuits are live!

Draw the wiring cables through the cable glands. For connection use the internal Ex-e approved terminal box and connect equipotential bonding.
After connection install the cables in a fixed position and protect them against mechanical and thermical damage. Close all openings and ensure IP protection (min. IP66).
Avoid temperature transfer and ensure not to exceed max. ambient temperature! For outdoor installation a protective shield against sun, rain and snow should be applied.
After mounting and installation a zero point compensation must be done to ensure correct measurement results (see description).
Sensors are maintenance free. An annual inspection is recommended. For electrical installations inspection and maintenance, EN/IEC 60079-17 can be used.
Clean with damp cloth only.
Ex sensors must not be opened and repaired by the end user.

B. Long cabling
We recommend using shielded signal wires and to connect one end of the shield to the ...Cos-... terminal box.

C. Separate ground wires
For supply and signal wires use separate grounds.

Schischek GmbH Germany, Muehlsteig 45, Gewerbegebiet Sued 5, 90579 Langenzenn, Tel. +49 9101 9081-0, Fax +49 9101 9081-77, E-Mail info-de@schischek.com

Parametrisation and commissioning

To change from operation to parametrisation mode
push the "ENTER" button ↵ for minimum 3 seconds.
If password protected: type password and push ↵.
Back over to menu "Save" and exit.

Operation → Parametrisation
push ↵ for min. 3 s

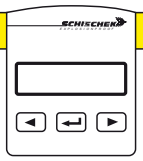

Example:

Menu language	English
Range	−25...+25 Pa
Output	4...20 mA
Output Ex-i	0...20 mA

Menu	Function	ENTER	Indication	Select	ENTER	Next indication	Select	ENTER	Next menu
Menu 1	**DE, EN, FR** Select language: German, English, French	↵	DE, EN, FR English Deutsch, English, Francais	◄ ►	↵				►
Menu 2	no function – menu skip								
Menu 3	no function – menu skip								
Menu 4	**Unit sensor** Select physical unit	↵	unit sensor Pa Pa, mbar, inH_2O	◄ ►	↵				►
Menu 5	**Range** Adjust the measuring range	↵	range **−25**...100 Pa ↑ adjust **lower** limit	◄ ►	↵	range −25...**25** Pa ↑ adjust **higher** limit	◄ ►	↵	►
Menu 6	no function – menu skip								
Menu 7	**Output V, mA** Select output signal as V or mA		output V/mA mA V, mA	◄ ►	↵				►
Menu 8	**Output range** Adjust output range		output range **4**...20 mA ↑ adjust **lower** limit	◄ ►	↵	output range 4...**20** mA ↑ adjust **higher** limit	◄ ►	↵	►
Menu 9	**Sensor error** Select signal at sensor error		sensor error 10 V/20 mA 10 V/20 mA or 0 V/0 mA	◄ ►	↵				►
Menu 10	**Output ◺◹** Select signal output behaviour		output ◺◹ increasing ◺◹ increasing, decreasing	◄ ►	↵				►
Menu 11	no function – menu skip								
Menu 12	no function – menu skip								
Menu 13	no function – menu skip								
Menu 14	no function – menu skip								
Menu 15	no function – menu skip								
Menu 16	**Output Ex-i (option, only at ...Cos-P-...-A)** Select lower output signal: 0 mA resp. 4 mA (0...20 or 4...20 mA)	↵	output Ex-i **0**...20 mA ↑ adjust **lower** limit	◄ ►	↵	output Ex-i 0...**20** mA ↑ adjust **higher** limit	◄ ►	↵	►
Menu 17	no function – menu skip								
Menu 18	**Zero point compensation** After short circuit the pressure nipples P+/P− the sensor gets a zero point calibration		set zero point yes no	◄ ►	↵				►
Menu 19	**Display function** Select display settings	↵	display function on illuminated on, on illuminated, off	◄ ►	↵				►
Menu 20	**Password** Select password protection	↵	new password yes no	◄ ►	↵	password 0000	◄ ►	↵	►
Menu 21	**Save and exit** Select: save data, factory setting, discard or back to menu	↵	save and exit save data save data, factory setting, discard, back to menu	◄ ►	↵				►
Menu 22	**Set offset** Add/subtract offset from measure value	↵	set offset 0.00 Pa	◄ ►	↵				►
Menu 23	no function – menu skip								
Menu 24	**Attenuation** Damping the output signal (signal filter)	↵	attenuation 0	◄ ►	↵				►

Schischek GmbH Germany, Muehlsteig 45, Gewerbegebiet Sued 5, 90579 Langenzenn, Tel. +49 9101 9081-0, Fax +49 9101 9081-77, E-Mail info-de@schischek.com

TROX® TECHNIK

The art of handling air

TROX GmbH
Heinrich-Trox-Platz
47504 Neukirchen-Vluyn
Germany

Phone: +49 (0) 2845 2020
+49 2845 202-265
E-mail: trox@trox.de
http://www.troxtechnik.com

© TROX GmbH 2016